XP-9181-WES7/XP-9381-WES7/XP-9781-WES7

1/3/7-slot Metal Standard PAC with E3845 CPU and WES7

Features

- Windows Embedded Standard 7 SP1 x64 (64-bit)
- Intel® Atom™ E3845 1.91 GHz
- 4 GB DDR3 SDRAM
- 32 GB SSD
- VGA / HDMI Display Output
- 2x 10/100/1000M Ethernet Ports
- Redundant Power Input

Introduction

The XP-9181-WES7/XP-9381-WES7/XP-9781-WES7 are WES7 based PACs that combine computing, I/O, and operator interface into a single unit, and provide the perfect solution for integrating HMI, data acquisition and control in an individual PAC. It is equipped with an Intel E3827 CPU, 1/3/7 I/O expansion slots and a variety of connectives including dual Gigabit Ethernet, VGA , USB port, RS-232 and RS-485 interface. Local I/O slots are available to use our I-9K and I-97K series I/O modules and remote I/O expansions are available to use our Ethernet I/O modules and RS-485 I/O modules.

Since WES7 has the same Win32 API as Windows 7, most popular applications on desktop can run on WES7 based Panel PC.

Windows Embedded Standard 7.0

Windows Embedded Standard 7

Most of the popular features in Windows software are included, such as EWF (Enhanced Write Filter), Remote Desktop Connection, IIS, ASP/ASP.NET, .NET Framework 4.5 and also supports rich development software solutions, such as VS 6.0, VS.NET, VB, Delphi, BCB, InduSoft.

- Full Win32 API
- Remote Desktop Protocol 5.1
- Silverlight 5
- Enhanced Write Filter
- .NET Framework 3.5, 4.0, 4.5, 4.7

Applications

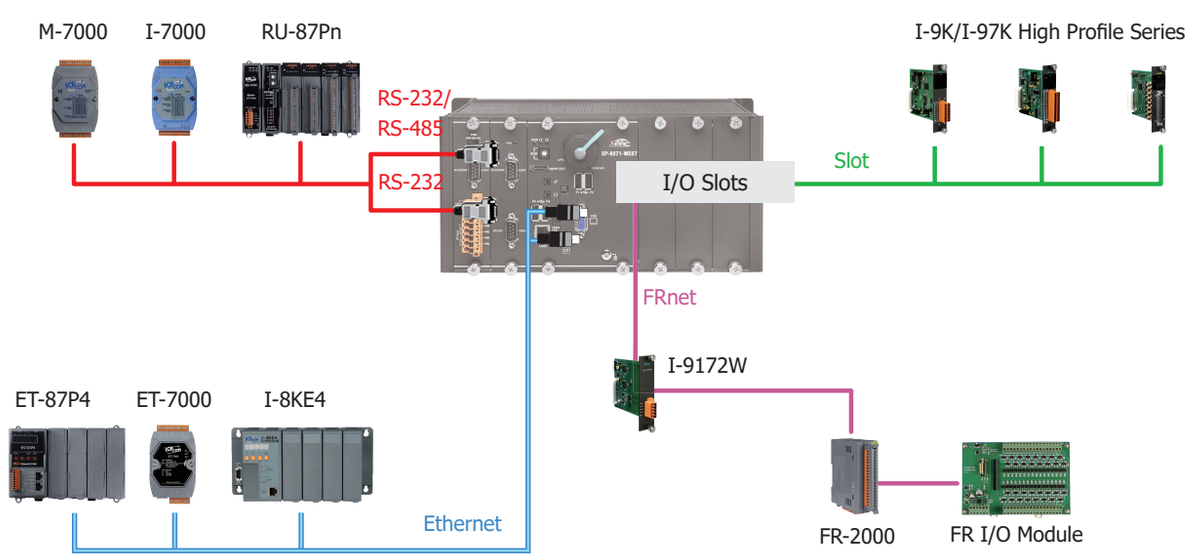

Specifications

Model	XP-9181-WES7	XP-9381-WES7	XP-9781-WES7
Software			
OS	Windows Embedded Standard 7 SP1 x64 (64-bit)		
Service	IE11, FTP Server, IIS 7.0, ASP (Java Script, VB Script)		
Framework Support	.Net Compact Framework 3.5, 4.0, 4.5, 4.7		
Multilanguage Support	English, German, French, Spanish, Portuguese, Russian, Italian, Korean, Japanese, Simplified Chinese, Traditional Chinese		
SDK Provided	Dll for VC, Dll for Visual Studio.Net		
Main Unit			
CPU	E3845, 1.91 GHz, 64-bit quad core		
64-bit Hardware Serial Number	Yes, for software copy protection		
System Memory	4 GB DDR3 SDRAM, 32 GB Flash		
Storage	32 GB SSD, 16 GB CF card		
Non-Volatile Memory	128 KB MRAM, 16 KB EEPROM		
Real Time Clock	Provide seconds, minutes, hours, dates, day of week, month, year		
Watchdog Timer	Dual Watchdog Timer		
Display			
Signal	VGA, HDMI		
Resolution	1280 x 1024 ~ 1920 x 1080 (16 : 9), 640 x 480 ~ 1024 x 768 (4 : 3)		
LED Indicators			
Status	1 x System, 2 x Power, 2 x Programmable		
I/O Expansion			
I/O Type	I-9K, I-97K series		
Slots	2	4	8
COM Ports			
Ports	1 x RS-232 (3000 VDC Isolated), 1 x RS-485 (3000 VDC Isolated), 2 x RS-232/RS-485 (3000 VDC Isolated)		
HMI			
Buzzer	Yes		
Rotary Switch	1 x 10 Position (0 ~ 9)		
Audio			
Cable	Microphone-in and Earphone-out		
Ethernet			
Ports	2 x RJ-45, 10/100/1000 Base-TX		
USB			
Ports	4 x USB 2.0		
Power			
Capacity	4.1 A, 5 V supply to CPU and backplane, 2.5 A, 5 V supply to I/O expansion slots, 33 W in total	4.2 A, 5 V supply to CPU and backplane, 2.4 A, 5 V supply to I/O expansion slots, 33 W in total	4.4 A, 5 V supply to CPU and backplane, 2.2 A, 5 V supply to I/O expansion slots, 33 W in total
Input Range	+10 ~ 30 VDC (1 kV Isolated)		
Redundant Power Inputs	Yes, with one power relay (1 A @ 24 VDC) for alarm		
Consumption	18.5 W (0.77 A @ 24 VDC)	18.7 W (0.78 A @ 24 VDC)	20.4 W (0.85 A @ 24 VDC)
Mechanical			
Dimension (W x L x H)	239 mm x 164 mm x 133 mm	300 mm x 164 mm x 133 mm	422 mm x 164 mm x 133 mm
Installation	DIN-Rail, Wall mounting		
Environmental			
Operating Temperature	-25 ~ +60 °C		
Storage Temperature	-30 ~ +80 °C		
Humidity	10 ~ 90 % RH (non-condensing)		

Appearance

XP-9181-WES7

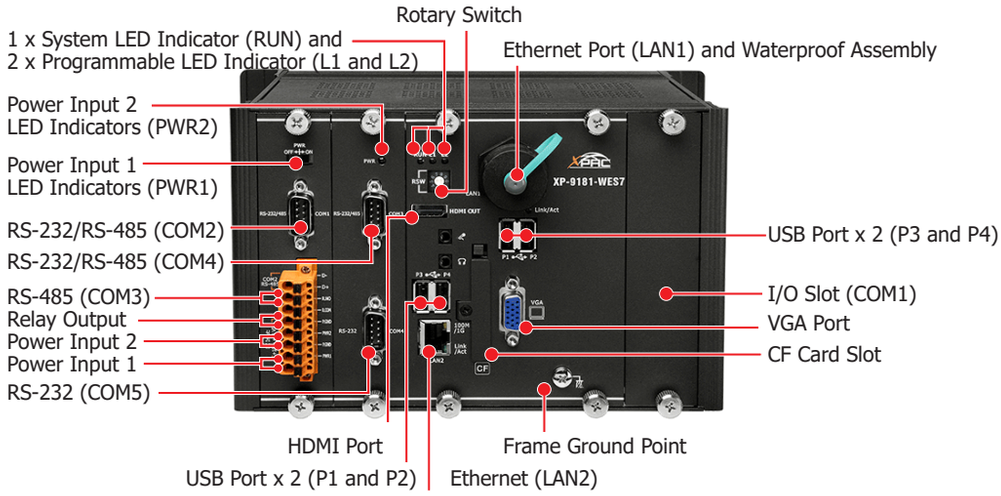

XP-9381-WES7

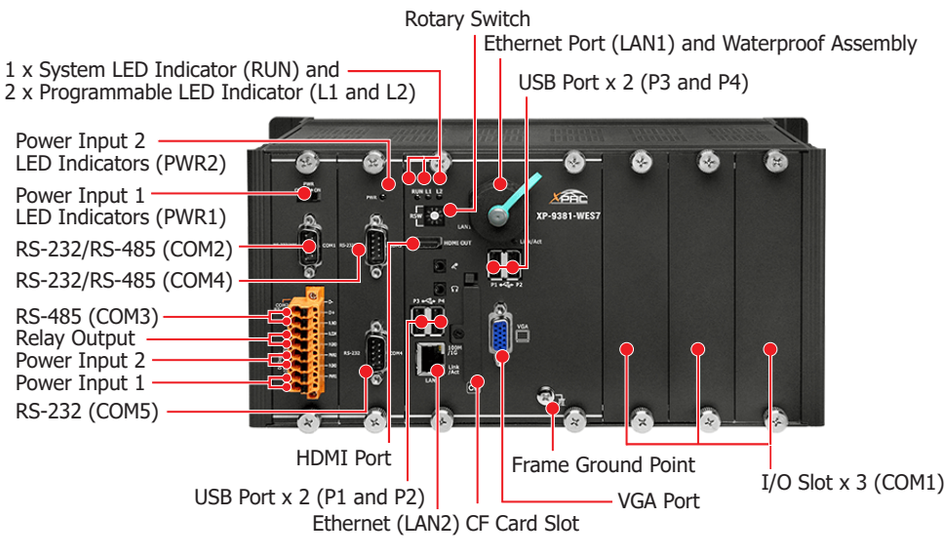

XP-9781-WES7

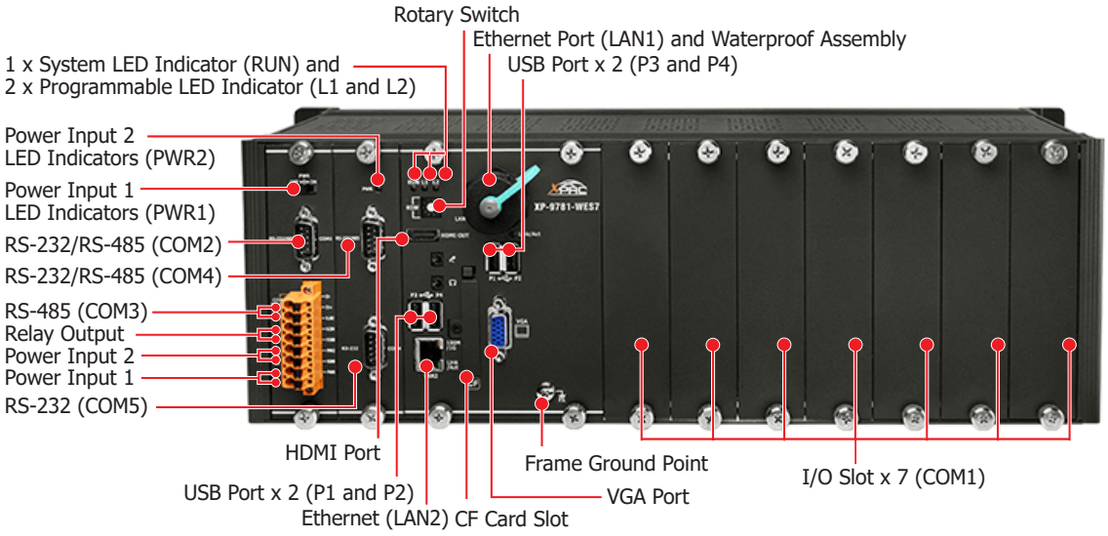

Dimensions (Units: mm)

XP-9181-WES7/XP-9381-WES7/XP-9781-WES7

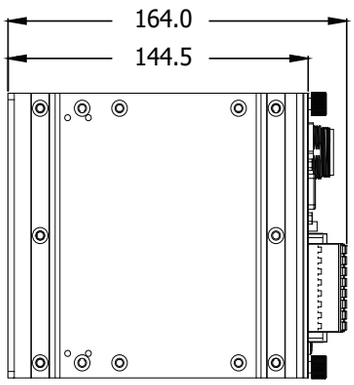

Left Side View

XP-9181-WES7

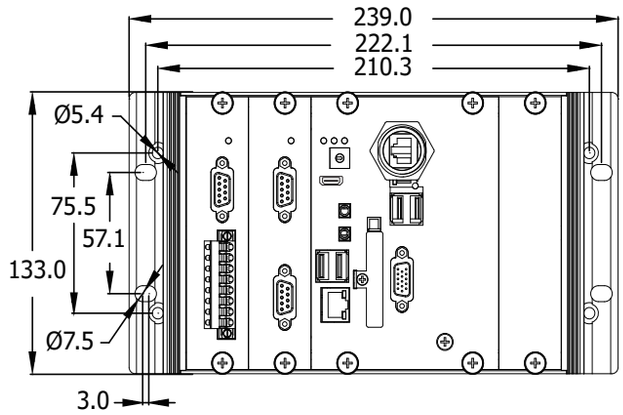

Front View

XP-9381-WES7

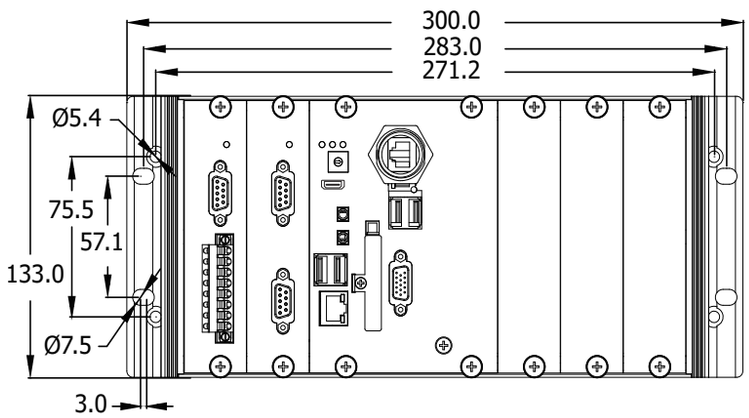

Front View

XP-9781-WES7

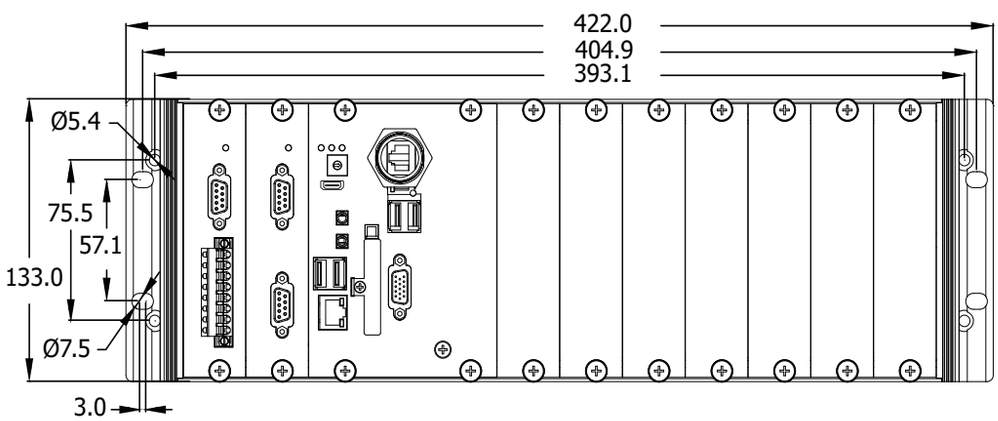

Front View

Ordering Information

XP-9181-WES7 CR	1-slot Metal Standard PAC with E3845 CPU and WES7 (RoHS)
XP-9381-WES7 CR	3-slot Metal Standard PAC with E3845 CPU and WES7 (RoHS)
XP-9781-WES7 CR	7-slot Metal Standard PAC with E3845 CPU and WES7 (RoHS)