# PM-3133/
# PM-3133P/
# PM-3133-RCT

## Smart Power Meter

User's Manual




ICP DAS Co., Ltd.
No. 111, Guangfu N. Rd., Hukou Township, Hsinchu County, Taiwan 30351, R.O.C.
TEL：886-3-597-3366 FAX：886-3-597-3733
http:// www.icpdas.com E-mail：service@icpdas.com

# Revision History

The table below shows the revision history:

| Revision | Date | Description |
|---|---|---|
| 1.13 | 2024/04/25 | ● Fix the Integer type value rage of kVAh,kVARh |
| 1.14 | 2025/2/4 | ● Added Chapter 8: Introduction to EtherNet/IP Communication<br>● Enhanced and expanded content in existing sections |
| 1.15 | 2025/8/20 | ● Section 1.1: Revised the Introduction and Features<br>● Section 2.1: Added specifications and information for models PM-3133-RCTxxxP and PM-3133P<br>● Section 3.3.2 to 3.3.5: Revised content related to CT positional accuracy and installation steps<br>● Section 4.2: Updated the content and diagram regarding connection and wiring.<br>● Section 6.2.2 (for Modbus versions): Added Modbus Coil Registers [System Boolean Setting Value], modified Modbus Holding Registers [System Parameter Setting] and Modbus Input Registers [ Power value (Float) ]<br>● Section 9.3.3 (for CANopen, -CPS version): Added Guarding and Heartbeat parameters to Store and Restore Object<br>● Section 9.3.4 (for CANopen, -CPS version): Added the Firmware Update Object to CANopen functionality<br>● Appendix: Updated content and added Q15, Q16 |
| 1.16 | 2025/11/21 | ● Section 2.1: Added Models PM-3133-CPS / PM-3133P-CPS / PM-3133-RCT-CPS<br>● Section 3.3.2 to 3.3.5: Revised content related to CT positional accuracy and installation steps<br>● Section 4.2: Updated the content and diagram regarding connection and wiring.<br>● Appendix: Updated content and added Q17, Q18 |


Copyright © ICP DAS Co., Ltd. All Rights Reserved. www.icpdas.com ✉ E-mail: service@icpdas.com

| | | |
|---|---|---|
| 1.17 | 2025/12/31 | ● Appendix: Q8 added CT cable length note. Added Q19. |
| 1.18 | 2026/3/19 | ● Section 6.2.2 Update Modbus Register<br>● Section 9.2.4.1: Update the table of Power Meter Data<br>● Section 9.3.1: Update the table of General Communication Entries & TxPDO Mapping Communication Entries<br>● Section 9.3.2:Update the table of Manufacturer Specific Profile Area<br>● Appendix: Updated Q9 |
| 1.19 | 2026/11/27 | ● Section 4.2: Updated the content and diagram regarding connection and wiring.<br>● Section 8.2.3: Update the table of Implicit Message<br>● Section 8.2.4: Update the table of Power Meter Data Frame<br>● Section 9.1: Added SW9–SW10 configuration information.<br>● Sections 9.2–9.3: Corrected errors in CANopen parameters and tables. |


Copyright © ICP DAS Co., Ltd. All Rights Reserved. www.icpdas.com ✉ E-mail: service@icpdas.com

# Table of Contents

**1. INTRODUCTION ..... 7**

1.1. PM-3133/PM-3133P/PM-3133-RCT Introduction ..... 7
1.2. Safety Guidelines ..... 9
1.3. Disclaimer ..... 9
1.4. Product Warranty and Customer Support ..... 10
1.4.1. Warranty Limitations ..... 10

**2. SPECIFICATIONS ..... 11**

2.1. Specifications ..... 11
2.2. Naming Rules ..... 13

**3. INSTALLATION ..... 14**

3.1. Inspection ..... 14
3.2. Safety ..... 14
3.3. Dimension and Latch ..... 15
3.3.1. Mounting and Dismounting ..... 16
3.3.2. PM-3133-xxx_xxxP CT's Installation Steps ..... 18
3.3.3. PM-3133-RCTxxxP CT Connection ..... 19
3.3.4. PM-3133-RCTxxxP CT's Installation Steps ..... 20
3.3.5. PM-3133-RCTxxxP CT's installation steps Precautions ..... 21
3.3.6. PM-3133P Current Input Scaling ..... 24

**4. WIRING DIAGRAMS ..... 25**

4.1. Connection ..... 25
4.2. Wiring ..... 28

**5. RELAY OUTPUT & LED INDICATOR ..... 33**
5.1. Relay ..... 33
5.2. LED Indicator ..... 33
**6. MODBUS-RTU COMMUNICATION ..... 34**
6.1. RS-485 Settings ..... 34
6.2. Modbus-RTU Setting ..... 37
6.2.1. Specifications ..... 37
6.2.2. Modbus Register ..... 39
**7. MODBUS-TCP COMMUNICATION ..... 49**
7.1. Default Settings ..... 49
7.1.1. Ethernet Configurations ..... 50
7.2. Connecting the Power Meter and Host PC ..... 52
7.2.1. Without PoE (Power over Ethernet) ..... 52
7.2.2. With PoE (Power over Ethernet) ..... 52
**8. ETHERNET/IP COMMUNICATION ..... 53**
8.1. Default Settings ..... 53
8.1.1. Utility configurations ..... 53
8.2. EtherNet/IP Protocol ..... 54
8.2.1. Object Model ..... 54
8.2.2. Explicit Message ..... 56
8.2.3. Implicit Message ..... 57
8.2.4. Power Meter Data Frame ..... 58
8.3. Connecting the Power and Host PC ..... 63
8.3.1. Without PoE(Power over Ethernet) ..... 63
8.3.2. With PoE(Power over Ethernet ): ..... 63


Copyright © ICP DAS Co., Ltd. All Rights Reserved. www.icpdas.com ✉ E-mail: service@icpdas.com

**9. CANOPEN COMMUNICATION ..... 64**

9.1. CANopen Settings ..... 64
9.2. CANopen Protocol ..... 67
9.2.1. SDO Introduction ..... 67
9.2.2. PDO Introduction ..... 78
9.2.3. NMT Introduction ..... 84
9.2.4. Special Functions for PM-3133-CPS ..... 89
9.3. Object Dictionary of PM-3133-CPS ..... 91
9.3.1. Communication Profile Area ..... 91
9.3.2. Manufacturer Specific Profile Area ..... 98
9.3.3. Store and Restore Object ..... 103
9.3.4. Firmware Update Object ..... 104

**10. APPENDIX: QUESTIONS & ANSWERS ..... 105**


Copyright © ICP DAS Co., Ltd. All Rights Reserved. www.icpdas.com ✉ E-mail: service@icpdas.com

# 1. Introduction

## 1.1. PM-3133/PM-3133P/PM-3133-RCT Introduction

**ICP DAS presents the PM-3133, PM-3133P and PM-3133-RCT series** — advanced, compact, and cost-effective smart power meters designed for real-time three-phase power monitoring across a wide range of applications.

With high accuracy (PM-3133: <0.5%, PM-3133-RCT: <2%, PF=1), these meters support power monitoring on both low voltage (primary side) and medium/high-voltage (secondary side) systems. They deliver reliable and precise energy consumption data for equipment in operation, helping users improve energy management and enhance operational efficiency.

The PM-3133, PM-3133P and PM-3133-RCT series support a wide input voltage range of 10 to 500 VAC, ensuring compatibility with global power systems.

The **PM-3133-RCT** features **Rogowski Coil technology** — a flexible, rope-style current transformer (CT) that simplifies installation in confined spaces. It supports large window size ranging from 55 mm to 185 mm, making it ideal for applications where conventional CTs cannot be easily installed.

The **PM-3133P** does not include current transformers (CTs) by default, allowing users to choose their own 333mV output CTs according to specific application requirements. However, it does not support Rogowski coils.


Copyright © ICP DAS Co., Ltd. All Rights Reserved. www.icpdas.com ✉ E-mail: service@icpdas.com

# Features：

- True RMS Power Measurements
- Energy Analysis for 3P4W-3CT, 3P3W-2CT, 3P3W-3CT, 1P2W-1CT, 1P3W-2CT
- Voltage Measurements Up to 500 V
- Clip-on CT for Easy Installation (PM-3133 and PM-3133-RCT)
- Current Measurement Capabilities
  PM-3133P Series: Supports 333 mV output CTs; actual current range depends on the CT's primary rating
  PM-3133-xxxP Series: Current measurements up to 400 A.
  PM-3133-RCTxxxP Series: Current measurements up to 4000 A
- Power Measurement Accuracy
  PM-3133P Series: Accuracy is approximately 2–5% (PF = 1), depending on the CT used. The CT ratio must be set correctly.
  PM-3133-xxxP Series: Accuracy better than ±0.5% (Power Factor = 1)
  PM-3133-RCTxxxP Series:

  – For -500P and -1000P models: Accuracy better than ±2% (PF = 1, Input Current > 50 A)
  – For -2000P and -4000P models: Accuracy better than ±2% (PF = 1, Input Current > 200 A)

- Bi-directional Energy
- Supports 2-Power Relay Output (Form A)
- Total Harmonic Distortion (THD)


Copyright © ICP DAS Co., Ltd. All Rights Reserved. www.icpdas.com ✉ E-mail: service@icpdas.com

## 1.2. Safety Guidelines

The PM-3133 contains hazardous voltages and requires careful handling during installation and operation. Adhere to the following safety guidelines to prevent injury or damage:

- The meter contains hazardous voltages and must never be disassembled. Failure to follow this practice may result in serious injury or death.
- Any work on or near energized meters, meter sockets, or other metering equipment poses a risk of electrical shock.
- Only qualified industrial electricians or metering specialists should perform installation and maintenance.
- ICP DAS assumes no responsibility for improper installation or failure to comply with national and local electrical codes.

## 1.3. Disclaimer

ICP DAS assumes no liability for any damage resulting from the use of this product. The company reserves the right to revise or modify this document at any time without prior notice.

- The information provided in this manual is believed to be accurate and reliable. However, ICP DAS assumes no responsibility for its use or for any infringements of patents or third-party rights resulting from its use.
- ICP DAS is not liable for any technical or editorial errors, omissions, or inaccuracies contained in this document.


Copyright © ICP DAS Co., Ltd. All Rights Reserved. www.icpdas.com ✉ E-mail: service@icpdas.com

## 1.4. Product Warranty and Customer Support

ICP DAS warrants that all products, under normal use conditions, will be free from defects in materials and workmanship for a period of one (1) year from the date of shipping. During the warranty period, ICP DAS will, at its discretion, repair or replace any defective product. This warranty applies only under normal use conditions and does not cover damages caused by misuse, improper installation, or failure to comply with relevant regulations.

**To report a defect:**

1. Contact ICP DAS:
   - Phone: **+886-3-597-3366**
   - Email: **service@icpdas.com**
2. Provide the following information:
   - Product model number and serial number
   - A detailed description of the issue
   - If the issue pertains to specific readings, include all relevant meter readings for reference.

**Returning merchandise:**

- A product serial number (SN) is required before sending any product back to ICP DAS.

### 1.4.1. Warranty Limitations

The warranty does not apply to defects resulting from:

- Unauthorized modifications.
- Misuse or operation outside the specified conditions.
- Use for purposes other than electrical power monitoring.

**Important Note:**

The PM-3133 is not a user-serviceable product. Any attempt to disassemble or repair the device will void the warranty.


Copyright © ICP DAS Co., Ltd. All Rights Reserved. www.icpdas.com ✉ E-mail: service@icpdas.com

# 2. Specifications

## 2.1. Specifications

| Model | PM-3133/ PM-3133P/ PM-3133-RCT | PM-3133-MTCP/ PM-3133P-MTCP/ PM-3133-RCT-MTCP | PM-3133-EIP/ PM-3133P-EIP/ PM-3133-RCT-EIP | PM-3133-CPS/ PM-3133P- CPS / PM-3133-RCT- CPS |
|---|---|---|---|---|
| **AC Power Measurement** | | | | |
| Wiring | 1P2W-1CT, 1P3W-2CT, 3P3W-2CT, 3P3W-3CT and 3P4W-3CT | | | |
| Measurement Voltage | 10 to 500 V (CAT III) | | | |
| Measurement Current | PM-3133-005P: CTØ10 mm (0.05 A – 5 A)<br>PM-3133-100P: CTØ10 mm (0.05 A – 60 A)<br>PM-3133-160P: CTØ16 mm (0.1 A – 100 A)<br>PM-3133-240P: CTØ24 mm (0.15 A – 200 A)<br>PM-3133-360P: CTØ36 mm (0.3 A – 300 A)<br>PM-3133-400P: CTØ36 mm (0.3 A – 400 A)<br>PM-3133-RCT500P: CTØ55 mm (5 A – 500 A)<br>PM-3133-RCT1000P: CTØ80 mm (5 A – 1000 A)<br>PM-3133-RCT2000P: CTØ105 mm (5 A – 2000 A)<br>PM-3133-RCT4000P: CTØ185 mm (5 A – 4000 A)<br>PM-3133P: Supports 333 mV output CTs; actual current range depends on CT's primary rating | | | |
| Measurement Frequency | 50-60 Hz | | | |
| W Accuracy | **PM-3133 Series:**<br>For -005P models: Accuracy better than ±0.5% (PF = 1, Input Current > 0.5 A)<br>For -100/-100P models: Accuracy better than ±0.5% (PF = 1, Input Current > 1.5 A)<br>For -160/-160P models: Accuracy better than ±0.5% (PF = 1, Input Current > 3 A)<br>For -240P models: Accuracy better than ±0.5% (PF = 1, Input Current > 3.5 A)<br>For -360P models: Accuracy better than ±0.5% (PF = 1, Input Current > 7 A)<br>For -400P models: Accuracy better than ±0.5% (PF = 1, Input Current > 10 A)<br><br>**PM-3133-RCT Series:**<br>For -500P/-1000P models: Accuracy better than ±2% (PF = 1, Input Current > 50 A)<br>For -2000P/ -4000P models: Accuracy better than ±2% (PF = 1, Input Current > 200 A) | | | |


Copyright © ICP DAS Co., Ltd. All Rights Reserved. www.icpdas.com ✉ E-mail: service@icpdas.com

| | | | | | |
|---|---|---|---|---|---|
| | | **PM-3133P Series:**<br>Accuracy is approximately 2–5% (PF = 1), depending on the CT used. The CT ratio must be set correctly | | | |
| Power Parameter Measurement | | True RMS voltage (Vrms), True RMS current (Irms), Active Power (kW), Active Energy (kWh), Apparent Power (kVA), Apparent Energy (kVAh),<br>Reactive Power (kVAR), Reactive Energy (kVARh), Power Factor (PF), Frequency(Hz) | | | |
| Data Update Rate | | 1 Second | | | |
| **Communication** | | | | | |
| RS-485 | Protocol | Modbus-RTU | - | | |
| | Baud rate | 9600,19200 (default), 38400, 115200; DIP Switch Selectable | - | | |
| | Data format | N,8,1 (default); N,8,2; E,8,1; E,8,2; O,8,1; O,8,2 ( FW version 1.07) | | | |
| | Isolation | 3000 VDC | - | | |
| | Bias Resistor | No(**Typically provided by the RS-485 Master; alternatively, a tM-SG4 or SG-785 can be used to provide bias**) | | | |
| Ethernet | Protocol | - | Modbus TCP | EtherNet/IP | - |
| | PoE | - | Yes, IEEE 802.3af | | - |
| CANopen | Protocol | - | | | CANopen |
| | Baud rate | - | | | 125 k (default), 250 k, 500 k, 1 M; DIP Switch Selectable |
| | Isolation | - | | | 3000 VDC |


Copyright © ICP DAS Co., Ltd. All Rights Reserved. www.icpdas.com ✉ E-mail: service@icpdas.com

| | | | |
|---|---|---|---|
| **Alarm Output** | | | |
| Power Relay | Form A (Normal Open) x 2; Relay Contact Voltage Range: 5 A @ 250 VAC (47 to 63Hz), 5 A @ 30 VDC | | |
| **Aux Power** | | | |
| Input Range | +12 to 48 VDC | +12 to 48 VDC or PoE | +12 to 48 VDC |
| Power Consumption | 2 W | | |
| Dimensions (W x L x H) | 127 mm x 105 mm x 33 mm | | |
| **Environment** | | | |
| Operating Temperature | -20 to +70 °C | | |
| Storage Temperature | -40 to +80 °C | | |

## 2.2. Naming Rules

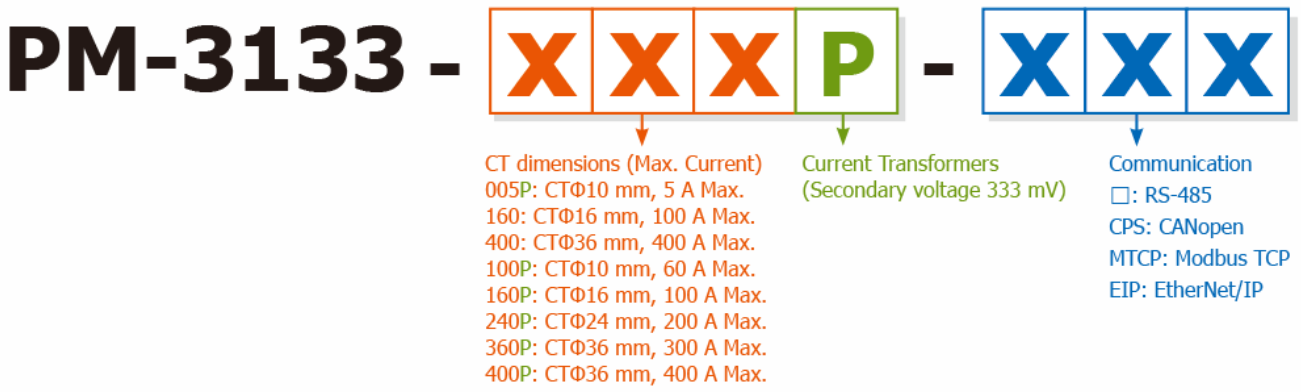



Copyright © ICP DAS Co., Ltd. All Rights Reserved. www.icpdas.com ✉ E-mail: service@icpdas.com

# 3. Installation

## 3.1. Inspection

The instrument may not function properly under the following conditions:
a) The exterior is visibly damaged.
b) It does not display properly after powering on.
c) It has been stored for an extended period under harsh conditions.
d) It has been damaged during transportation.

## 3.2. Safety

- Please clean the instrument using a soft, dry cloth.
- Do not use chemicals, detergents, or volatile solvents to clean the instrument, as they may cause damage to the cover.
- The product includes external split type clip-on CTs. Do not disconnect or replace them with other CTs, as this is strictly prohibited.
- Carefully read this operation manual before use.
- Re-confirm the measurement position before installation.
- The PM-3133 series can be installed using rail mounting or embedded mounting, without the need for drilling holes or using screws. The rail width should not exceed 35 mm.
- The meter's auxiliary power supply range is DC +12V to +48V.


Copyright © ICP DAS Co., Ltd. All Rights Reserved. www.icpdas.com ✉ E-mail: service@icpdas.com

## 3.3. Dimension and Latch

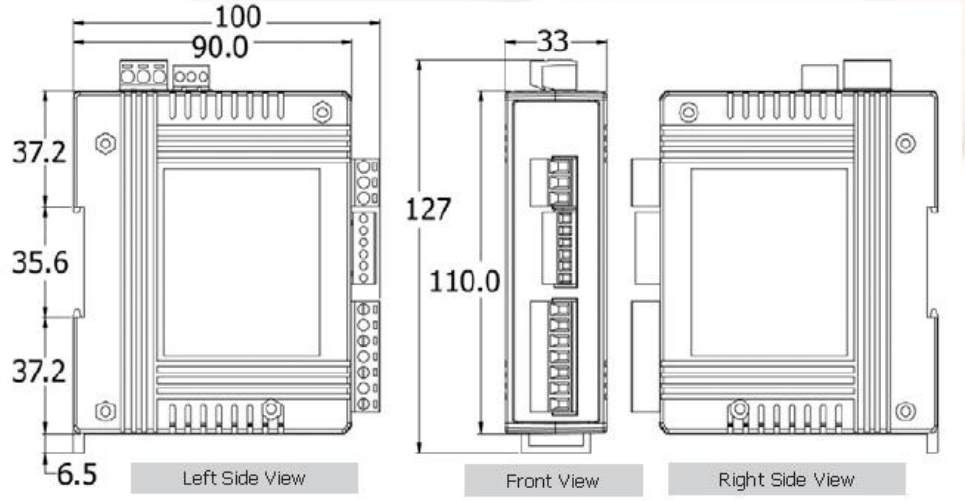


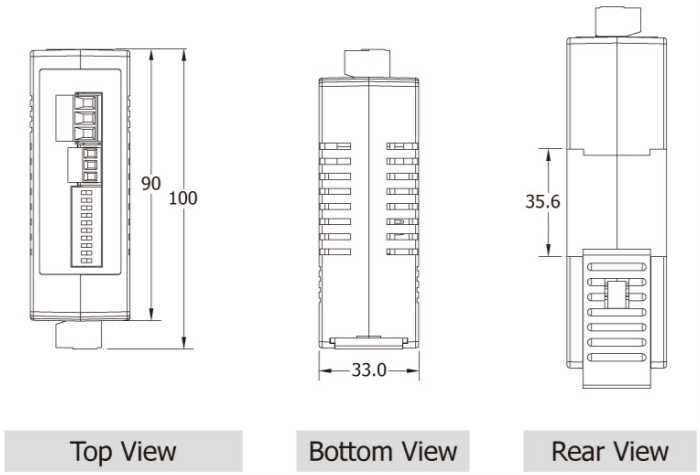



Copyright © ICP DAS Co., Ltd. All Rights Reserved. www.icpdas.com ✉ E-mail: service@icpdas.com

## 3.3.1. Mounting and Dismounting

**A. Mounting:** Place the PM-3133 onto the rail. Then press the front of the PM-3133 toward the mounting surface until you hear it click into place.

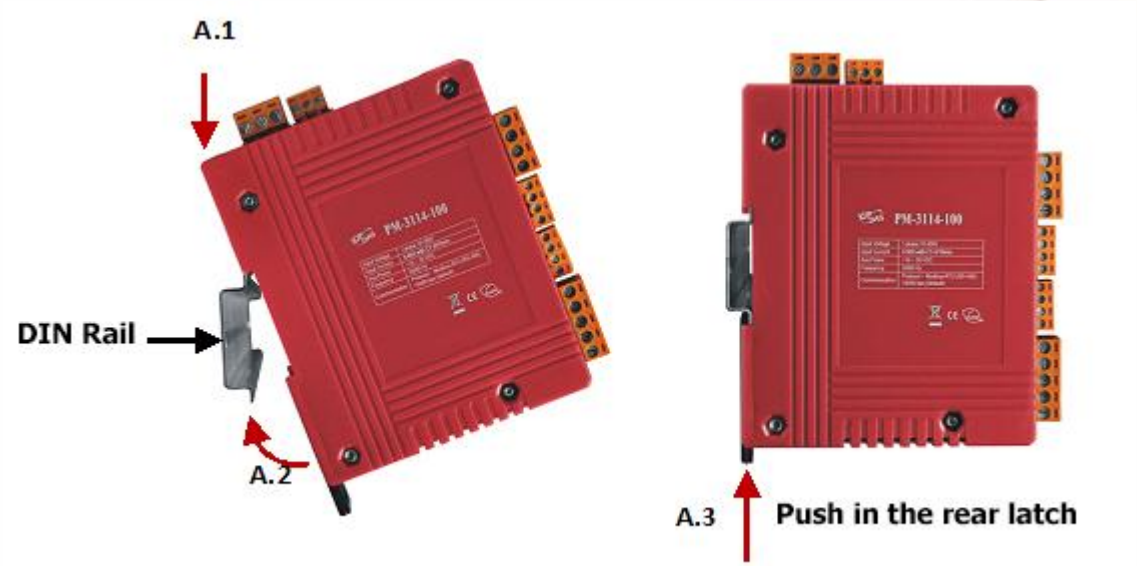


**B. Dismounting:** Pull out the rear latch and remove the PM-3133 from the rail.

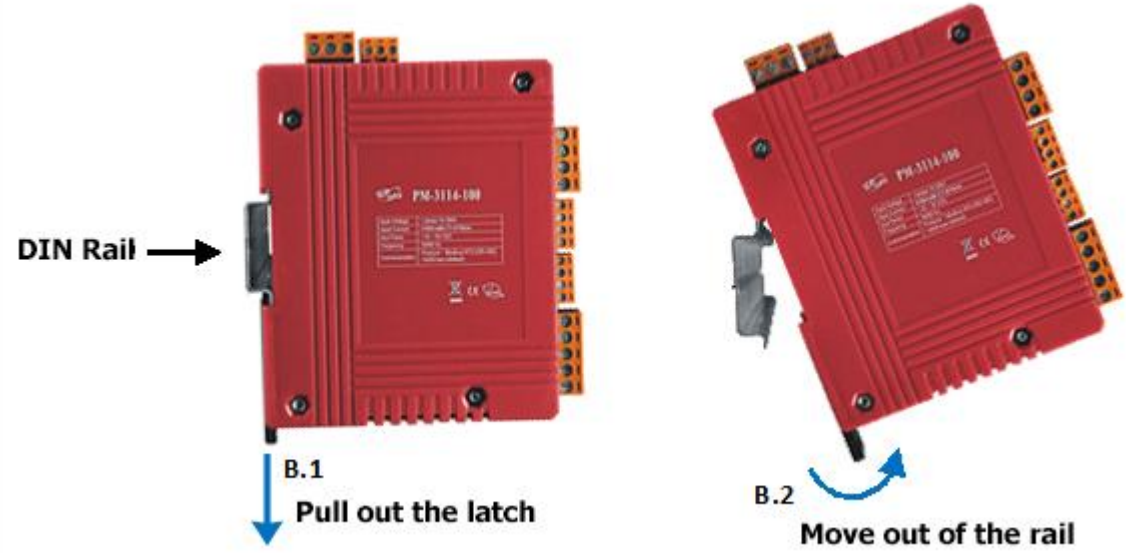



Copyright © ICP DAS Co., Ltd. All Rights Reserved. www.icpdas.com ✉ E-mail: service@icpdas.com

**C. Wire Disconnection:**

1. Unlock the CT clip and remove the CT from the power cable, avoiding disconnecting the CT terminal wires if possible (do not disconnect the terminal wires first).
   Warning! If you need to remove the CT terminal wires, make sure to first detach the CT before removing the CT terminal wires. This is to prevent high open-circuit secondary voltage being generated on the secondary side of the CT, which could cause electric shock or damage to the CT and connected equipment in the secondary circuit.
2. Disconnect the voltage input wires from the terminals and wrap the wire ends with insulating tape.
3. Disconnect the communication wires from the terminal.
4. Disconnect the auxiliary power from the terminal, then wrap the wire ends with insulating tape.



CT Input Terminal Wires


Copyright © ICP DAS Co., Ltd. All Rights Reserved. www.icpdas.com ✉ E-mail: service@icpdas.com

## 3.3.2. PM-3133-xxx_xxxP CT's Installation Steps

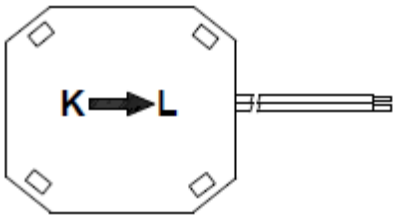


Bottom view

- At the bottom of the CT, there is a "K→L" mark.



- Open the CT clip.




- Make sure the power current direction follow the "K→L" marking on the CT and then close the CT clip.




- Complete the Installation.

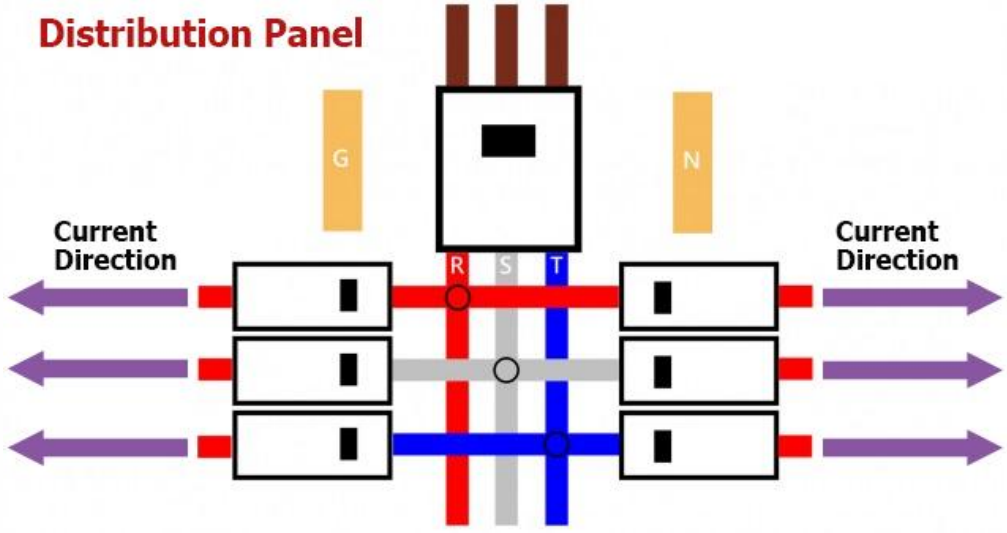



Copyright © ICP DAS Co., Ltd. All Rights Reserved. www.icpdas.com ✉ E-mail: service@icpdas.com

### 3.3.3. PM-3133-RCTxxxP CT Connection

Please firstly check the current input terminal, and then in white (or red) - black, white (or red) - black, white (or red) - black wire sequences (CT1-P1, CT1-P2, CT2-P1, CT2-P2, CT3-P1, CT3-P2). Then connect the CT's, and close the CT clip. Make sure the arrow direction sign on CT's follows current flow direction.



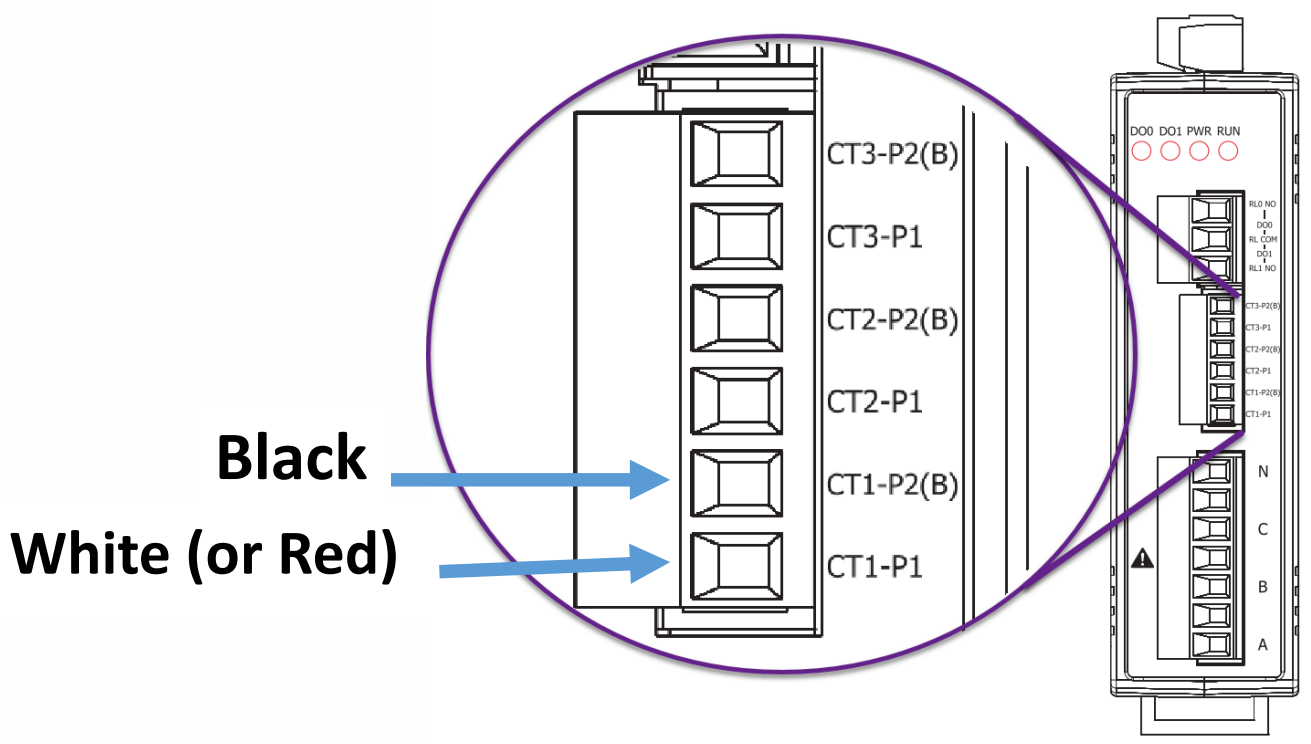



Copyright © ICP DAS Co., Ltd. All Rights Reserved. www.icpdas.com ✉ E-mail: service@icpdas.com

## 3.3.4. PM-3133-RCTxxxP CT's Installation Steps

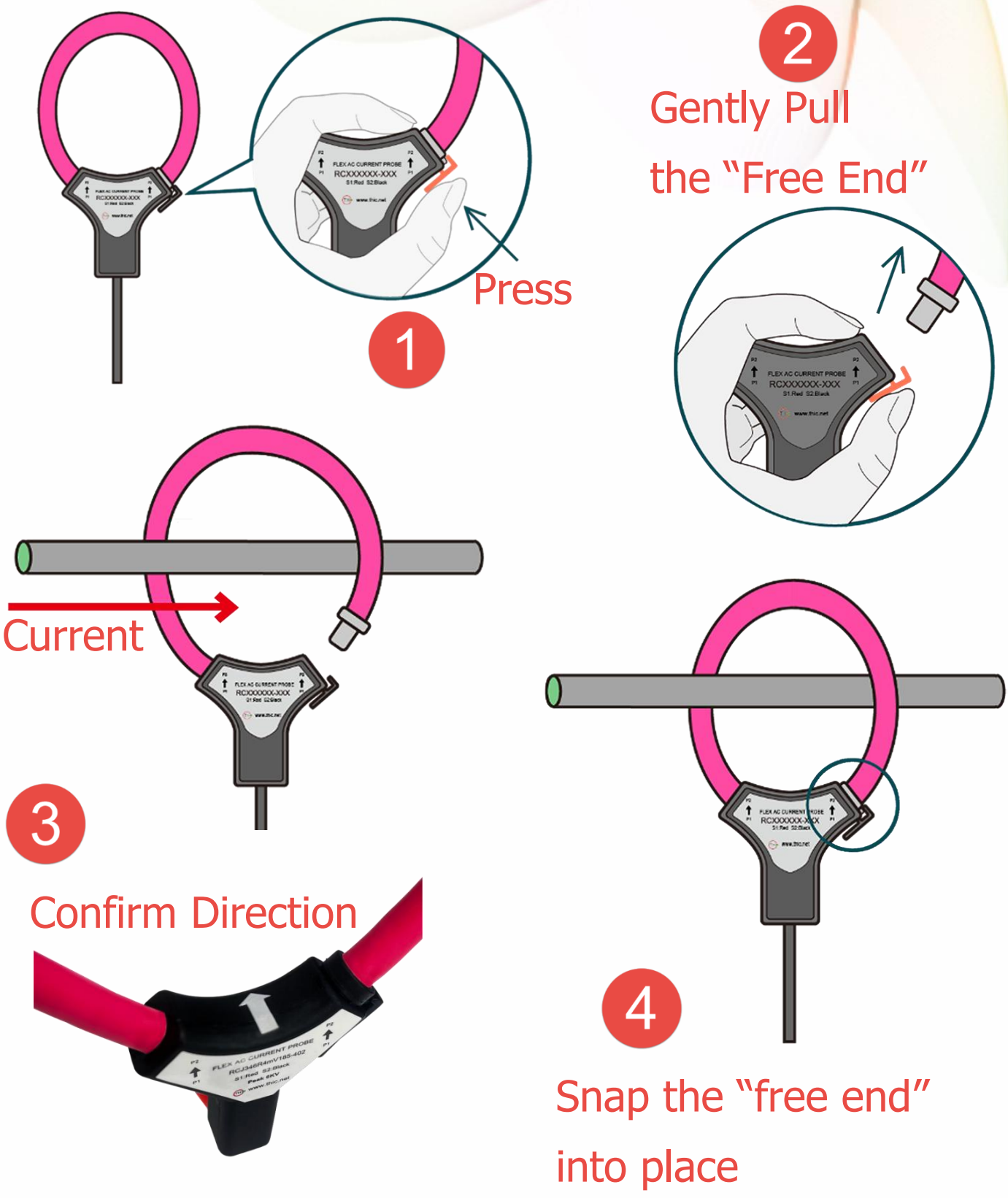



Copyright © ICP DAS Co., Ltd. All Rights Reserved. www.icpdas.com ✉ E-mail: service@icpdas.com

## 3.3.5. PM-3133-RCTxxxP CT's installation steps

### Precautions

1. The ICP DAS Rogowski power meter is calibrated with the conductor positioned at the center (Position A in Figure 1.0), which is the ideal location to ensure measurement accuracy.

2. The Rogowski coil is not a completely closed circular structure, as it has a connection joint. The dashed area at Position D in Figure 1.0 indicates the location of this connection. It is known that when the measured conductor is placed closer to this area, the measurement error increases because magnetic flux variations in that section cannot be properly detected. Please avoid measuring current within the dashed area, as doing so may result in measurement errors exceeding −5%. Moreover, external magnetic flux can also affect the connection section, further increasing measurement errors.

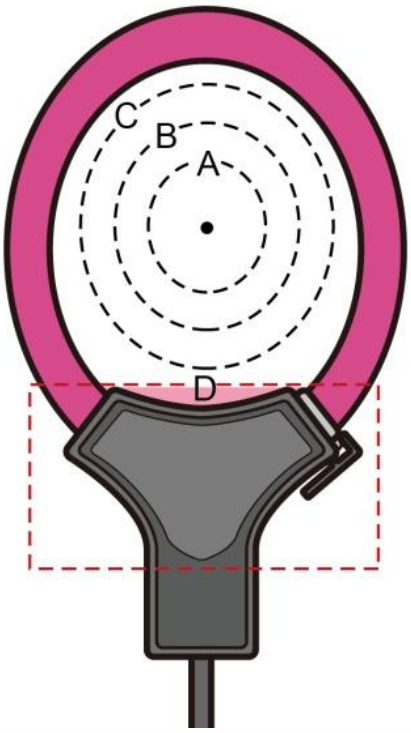


**Figure 1.0**

Before performing current measurements, ensure that all other current-carrying conductors, except the one being measured, are kept away from the Rogowski coil's connection section as much as possible.


Copyright © ICP DAS Co., Ltd. All Rights Reserved. www.icpdas.com ✉ E-mail: service@icpdas.com

3. In practical applications, if the measured conductor is offset from the center of the Rogowski coil, tilted, or if the conductor size is disproportionate to the coil diameter, the measurement accuracy may be affected. When the conductor is only slightly tilted or off-center, the meter can still maintain acceptable measurement accuracy, but the error will increase accordingly. To achieve higher measurement precision, it is recommended to keep the measured conductor as perpendicular to the coil as possible and ensure it passes through the center of the coil. Figure 1.1 illustrates the recommended cable tie fixation method to minimize tilt.

In Figure 1.2, when the conductor's tilt angle is large and its position is close to the coil's connection end, the measurement error becomes the greatest.

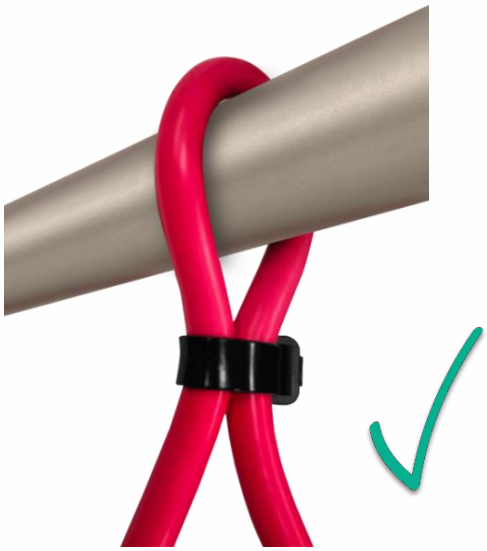

**Figure 1.1**

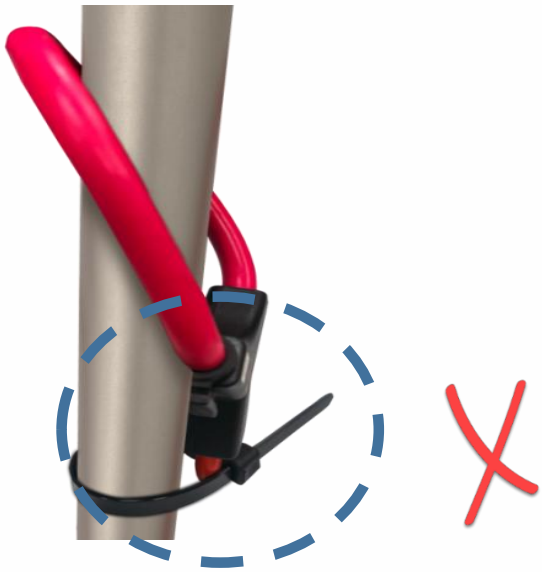

**Figure 1.2**

**Good Installation Method**

1. The cable tie is fastened close to the wire to prevent the CT from slipping.
2. The tilt angle is small.
3. Avoid positioning the CT near location D.

**Poor Installation Method**

1. Large tilt angle.
2. Too close to connection point D


Copyright © ICP DAS Co., Ltd. All Rights Reserved. www.icpdas.com ✉ E-mail: service@icpdas.com

4. At lower input currents (approximately 5%–15% of the rated current), the Rogowski coil exhibits relatively higher measurement error.

The recommended operating current range vs. measurement accuracy is shown in the table below:

| Rated Current | Recommended Operating Current Range | Low Current Range Error (5%–15% of Rated Value) | Mid-to-High Current Range Accuracy (15%–100% of Rated Value) |
|---|---|---|---|
| 500A | 50A – 500A | Higher Error (±2%–±4%) | Within ±2%; if the conductor is positioned at the center (Position A in Figure 1.0), the accuracy can be further improved to within ±1%. |
| 1000A | 50A – 1000A | | |
| 2000A | 200A – 2000A | | |
| 4000A | 200A – 4000A | | |

5. Do not extend the Rogowski coil's lead wires by yourself.

Modifying the lead length will disrupt the original shielding structure, allowing external electromagnetic interference to couple into the sensing signal, which may cause waveform distortion and reduced measurement accuracy.

If a special or extended lead length is required, please contact ICP DAS to obtain a factory-designed version with proper shielding treatment.

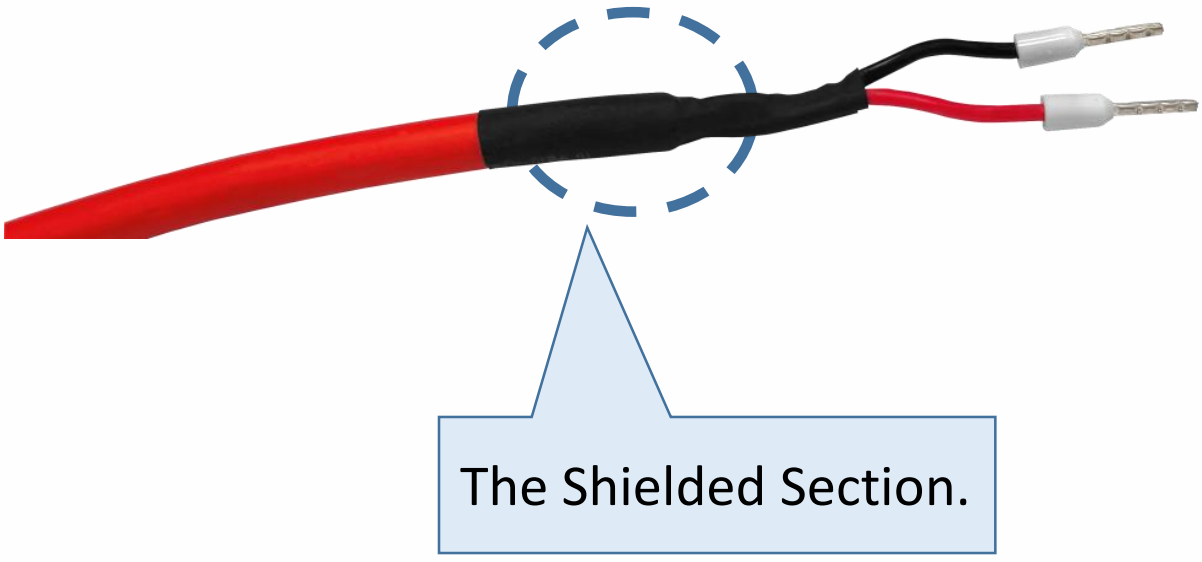



Copyright © ICP DAS Co., Ltd. All Rights Reserved. www.icpdas.com ✉ E-mail: service@icpdas.com

## 3.3.6. PM-3133P Current Input Scaling

1. The external CT's are fragile, please handle with care.
2. **The current input of PM-3133P series is in mV range.** The other CT's, for example, from panel will damage the instrument due to its large current (around 5A)
3. **CT Selection Considerations:**
   Adding current transformer (333mV Output CTs) has the effect of reducing the measured current by the CT ratio (let's say 40:1 for 200A CT as example). So a current of 200A becomes 5A. Since the meter sees 5A, many of the measurements it reports will be low by a factor of 40 unless they are scaled up by 40.

| Current transformer | CT Ratio | | Current transformer | CT Ratio |
|---|---|---|---|---|
| 50A CT | 10:1 | | 400A CT | 80:1 |
| 60A CT | 12:1 | | 800A CT | 160:1 |
| 100A CT | 20:1 | | 1000A CT | 200:1 |
| 200A CT | 40:1 | | 1200A CT | 240:1 |

**Note:**

A. Please use **low phase angle error** CTs: essential for accurate power and energy
measurements. (Example: phase error <2°)

B. Accuracy is approximately 2–5% (PF = 1), depending on the CT used. The CT ratio must be set correctly

C. **PM-3133P only for external 333mV Output CTs (Rogowski coils are not supported)**.
Safe: burden resistor built-in, 333 mVac voltage output at rated full scale current, no shorting blocks needed.

D. This meter requires external CT(s) to operate:
1P2W-1CT requires 1 CT per meter.
3P3W-2CT/1P3W-2CT requires 2 CTs per meter.
3P4W-3CT/3P3W-3CT requires 3 CTs per meter


Copyright © ICP DAS Co., Ltd. All Rights Reserved. www.icpdas.com ✉ E-mail: service@icpdas.com

# 4. Wiring Diagrams

## 4.1. Connection

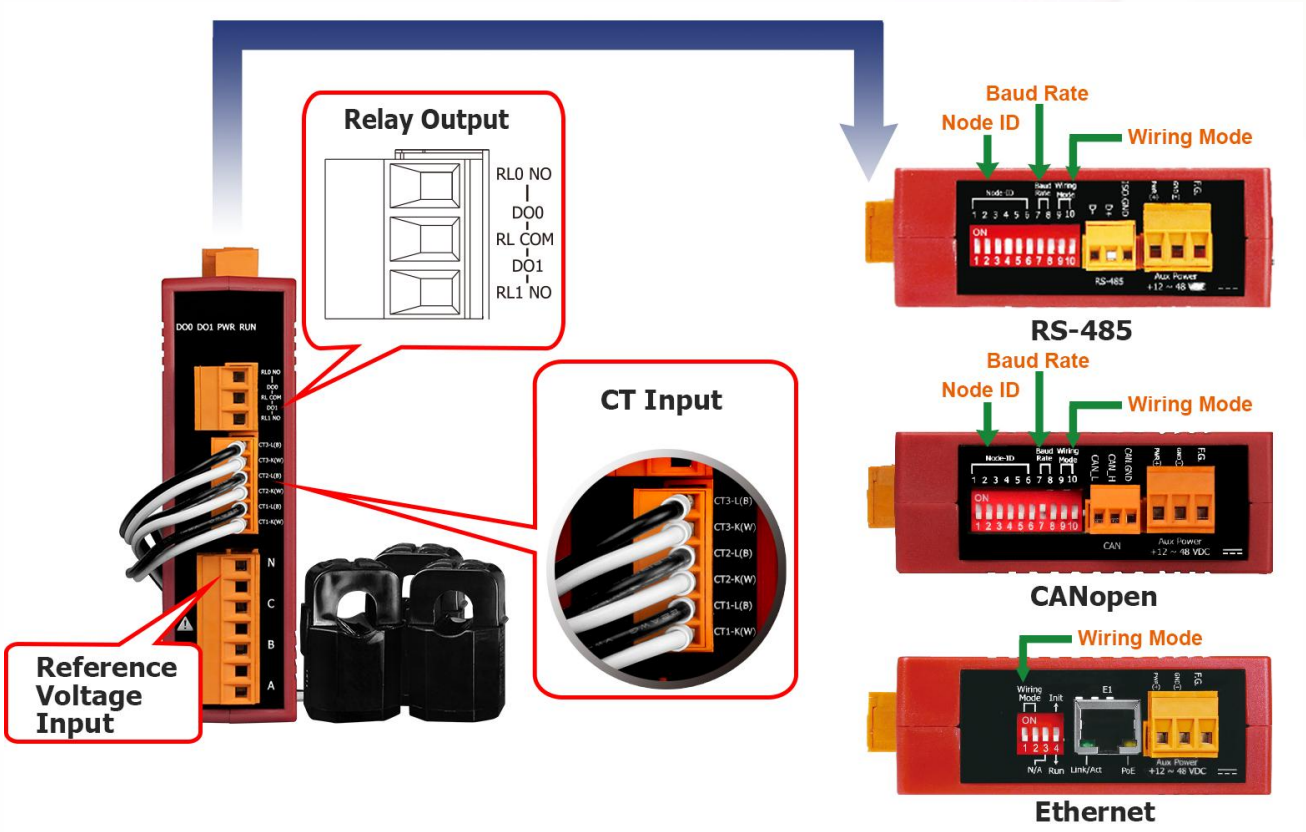


**Wiring Specifications:**

- **CT (Current Transformer) Wires:** AWG 16 to 28, Screw Torque Value: 1.7 lb-in
- **Reference Voltage Wires:** AWG 12 to 24, Screw Torque Value: 7.0 lb-in
- **Auxiliary Power:** AWG 12 to 24, Screw Torque Value: 7.0 lb-in
- **Relay Output:** AWG 12 to 24, Screw Torque Value: 7.0 lb-in


Copyright © ICP DAS Co., Ltd. All Rights Reserved. www.icpdas.com ✉ E-mail: service@icpdas.com

### Voltage Input

1. PM-3133 series supports input voltage up to 500VAC.
   For input voltage exceeding 500VAC, use a PT (power transformer), and adjust the PT RATIO settings.
2. Confirm the RST (ABC) phase sequence.

### Current Input

1. Handle external CTs with care, as they are fragile.
2. Only use the CTs provided with the device. Using other CTs (e.g., from a panel), could damage the instrument due to their high current (around 5A)
3. When multiple smart meters (PM-3133 series) are installed, do not interchange CTs between devices. Each set of meters and their split-type clip-on CTs are calibrated individually. Mixing them may result in inaccurate measurements.
4. To ensure correct installation, verify the CT wiring sequences before clipping the CTs onto the power cable of the monitoring equipment.
5. **When measuring current, never open the secondary circuit of a CT while the primary has a load. Always detach the CT before removing the terminal wires to prevent injury.**
6. Exercise extra caution when working in confined space with CTs.
7. The current flow direction must follow K-L marking on the CT.
8. Select the appropriate CT size based on the diameter of the monitored equipment's power cable:
   - For power cable diameter < Φ10, suitable for a 60A CT.
   - For power cable diameter Φ10 to Φ16, suitable for a 100A CT.
   - For power cable diameter Φ16 to Φ24, suitable for a 200A CT.
   - For power cable diameter Φ36, suitable for either a 300A CT or a 400A CT.
9. Do not exceed the rated current value of the CT.


Copyright © ICP DAS Co., Ltd. All Rights Reserved. www.icpdas.com ✉ E-mail: service@icpdas.com

## CT Dimensions(Units: mm)

005:CTΦ10mm (5 A Max.)
100:CTΦ10mm (60 A Max.)

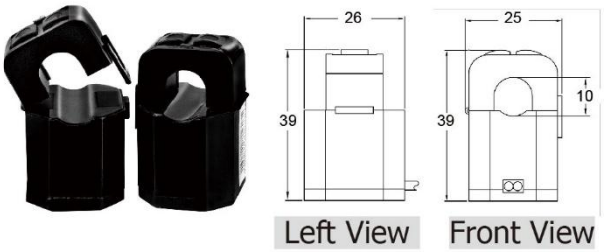


360:CTΦ36mm (300 A Max.)

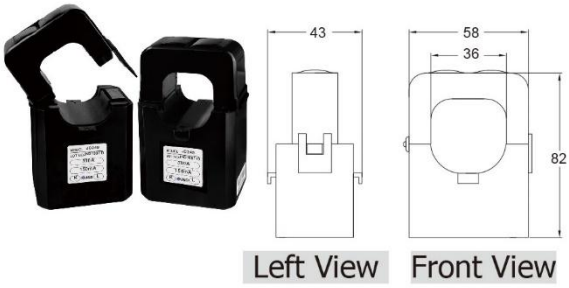


160:CTΦ16mm (100 A Max.)

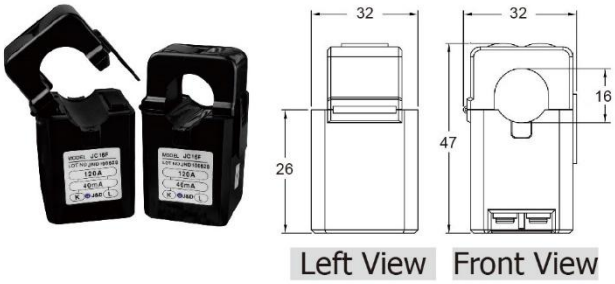


400:CTΦ36mm (400 A Max.)

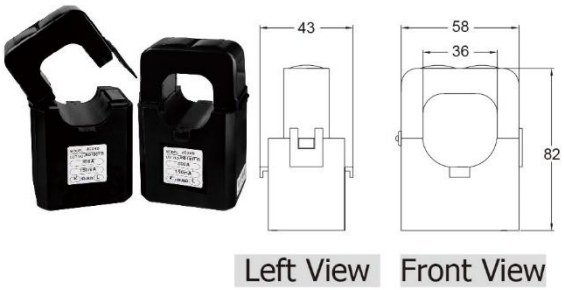


240:CTΦ24mm (200 A Max.)

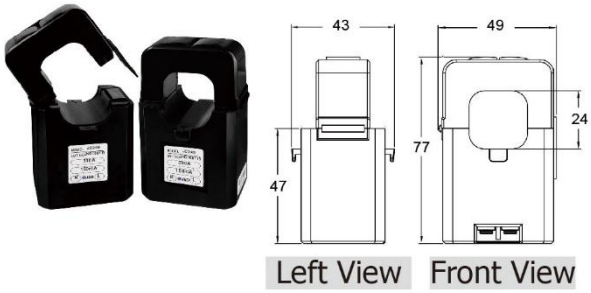


| Models | A (Inside diameter) | B (Outer diameter) |
|---|---|---|
| PM-3133-RCT500P | 55mm | 68mm |
| PM-3133-RCT1000P | 80mm | 93mm |
| PM-3133-RCT2000P | 105mm | 118mm |
| PM-3133-RCT4000P | 185mm | 199mm |




**Note:** The length of the CT wires can be extended up to 8 meters (except for Rogowski coil CTs) without compromising accuracy.
It is recommended to use **AWG 16 to 28 twisted pair wires** with a **screw torque value of 1.7 lb-in** to reduce interference.


Copyright © ICP DAS Co., Ltd. All Rights Reserved. www.icpdas.com ✉ E-mail: service@icpdas.com

## 4.2. Wiring

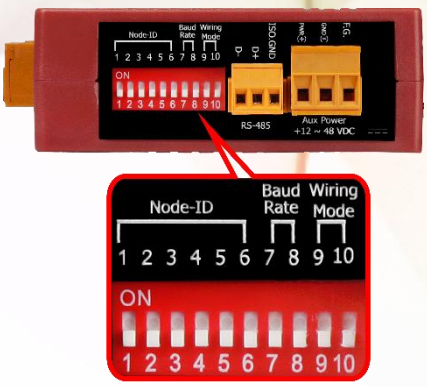


- SW9 - SW10 Settings

  For the PM-3133,

  - All five wiring modes — **1P2W-1CT**, **1P3W-2CT**, **3P3W-2CT**, **3P3W-3CT**, and **3P4W-3CT** — can be configured via the [Wiring Mode] register, after setting **DIP switches 9 and 10** to **Software Setting** mode.
  - Alternatively, for **3P3W-2CT**, **3P3W-3CT**, and **3P4W-3CT**, you may choose to configure them using **DIP switches** as shown below:

| Wiring | SW 9 | SW 10 |
|---|---|---|
| Software Setting | OFF | OFF |
| 3P3W-2CT | **ON** | OFF |
| 3P3W-3CT | OFF | **ON** |
| 3P4W-3CT | **ON** | **ON** |

- 1P2W-1CT(Single-phase, Single-circuit) (Configuration required via software)

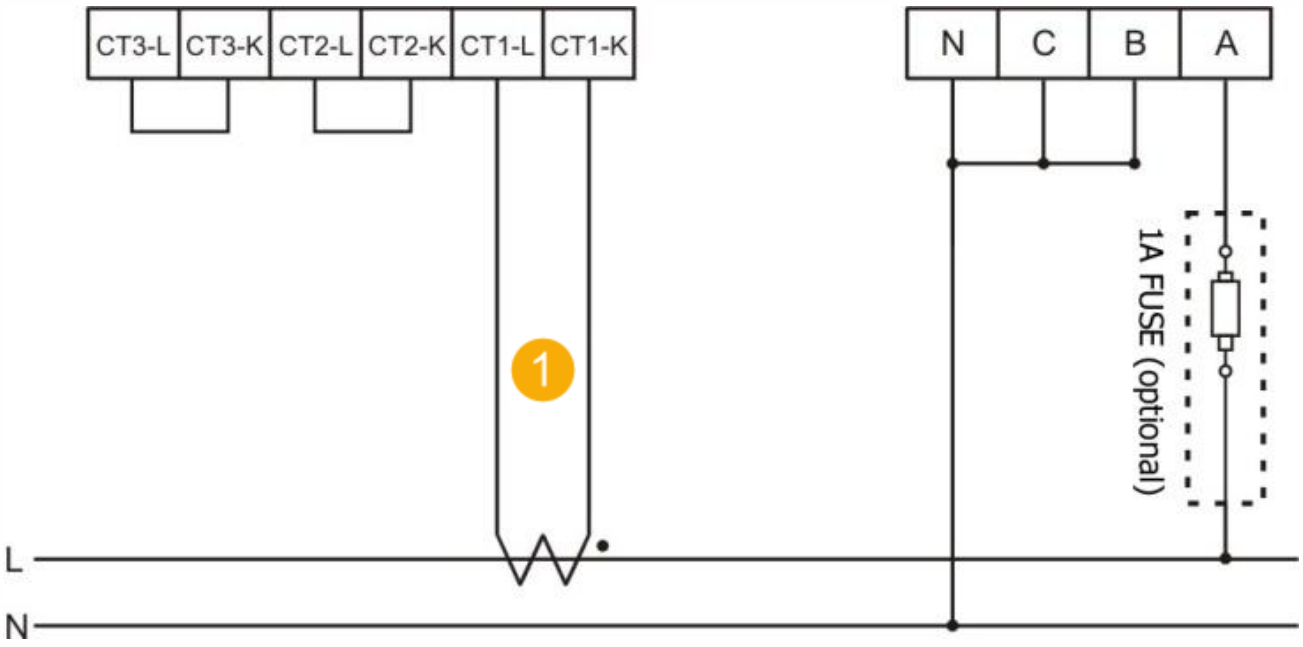



Copyright © ICP DAS Co., Ltd. All Rights Reserved. www.icpdas.com ✉ E-mail: service@icpdas.com

- 1P2W-3CT
  (Single-phase, 3-circuit) (Configuration required via software. Select "1P2W-1CT" as the wiring configuration.)

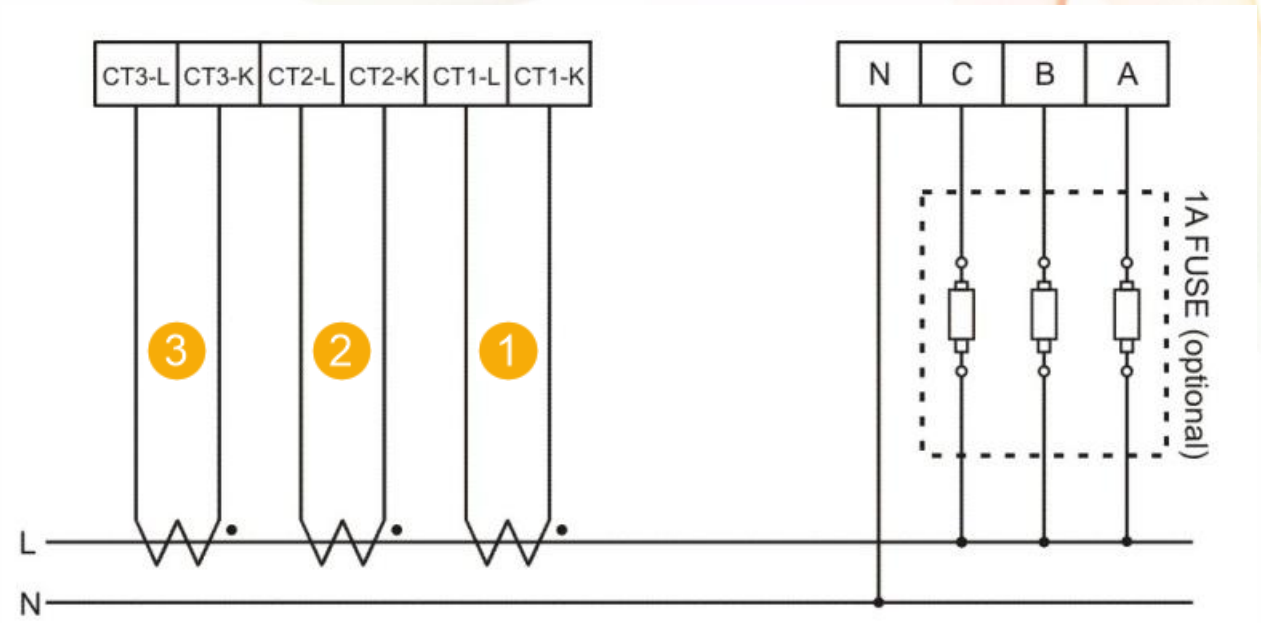


- 1P3W-2CT
  (Single-phase, Single-circuit) (Configuration required via software)

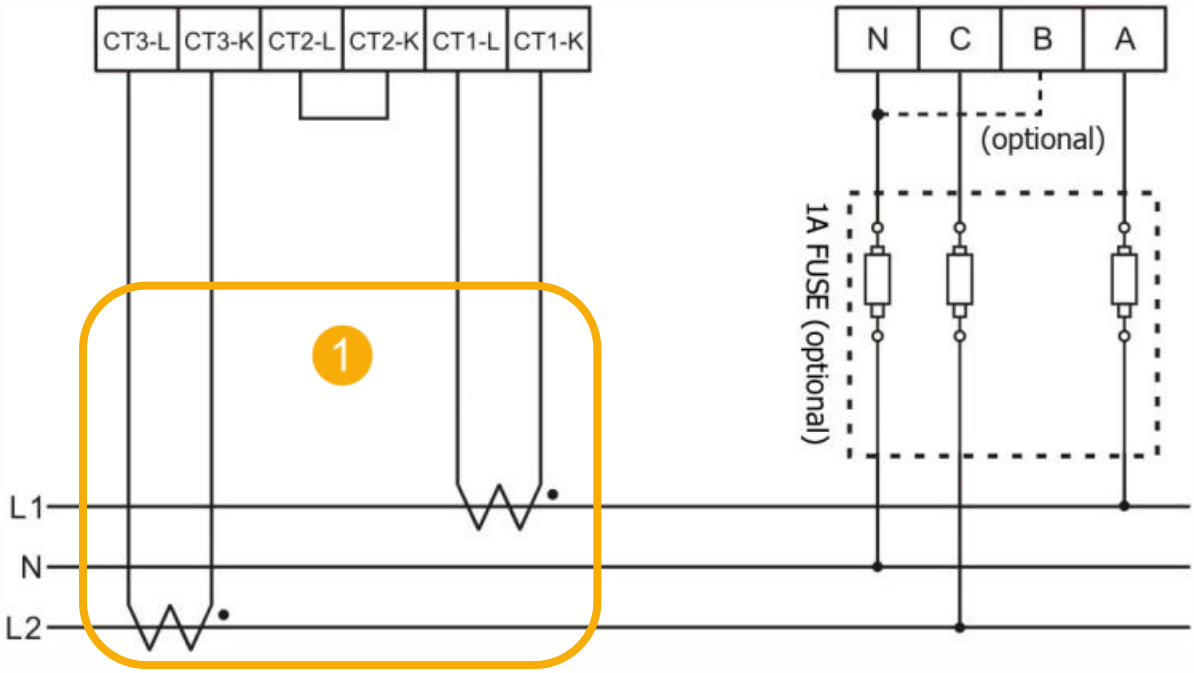



Copyright © ICP DAS Co., Ltd. All Rights Reserved. www.icpdas.com ✉ E-mail: service@icpdas.com

- 3P4W-3CT (Can be configured via software or DIP switch)

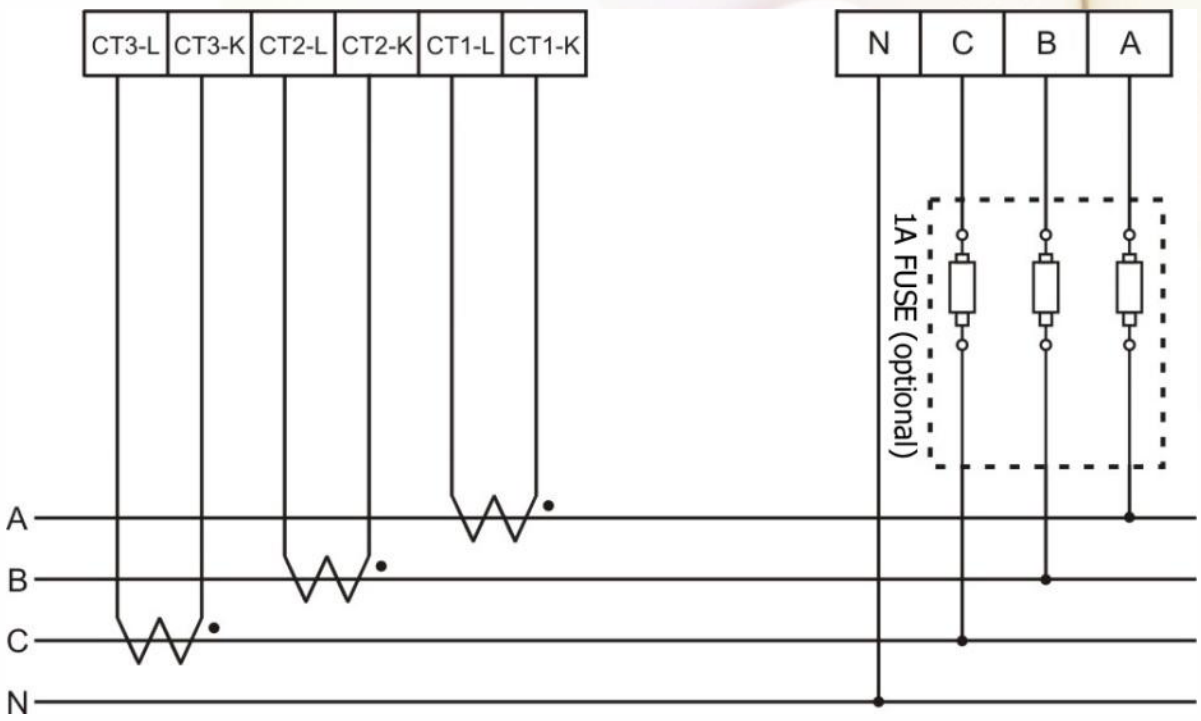



Copyright © ICP DAS Co., Ltd. All Rights Reserved. www.icpdas.com ✉ E-mail: service@icpdas.com

- 3P3W-2CT (Can be configured via software or DIP switch)

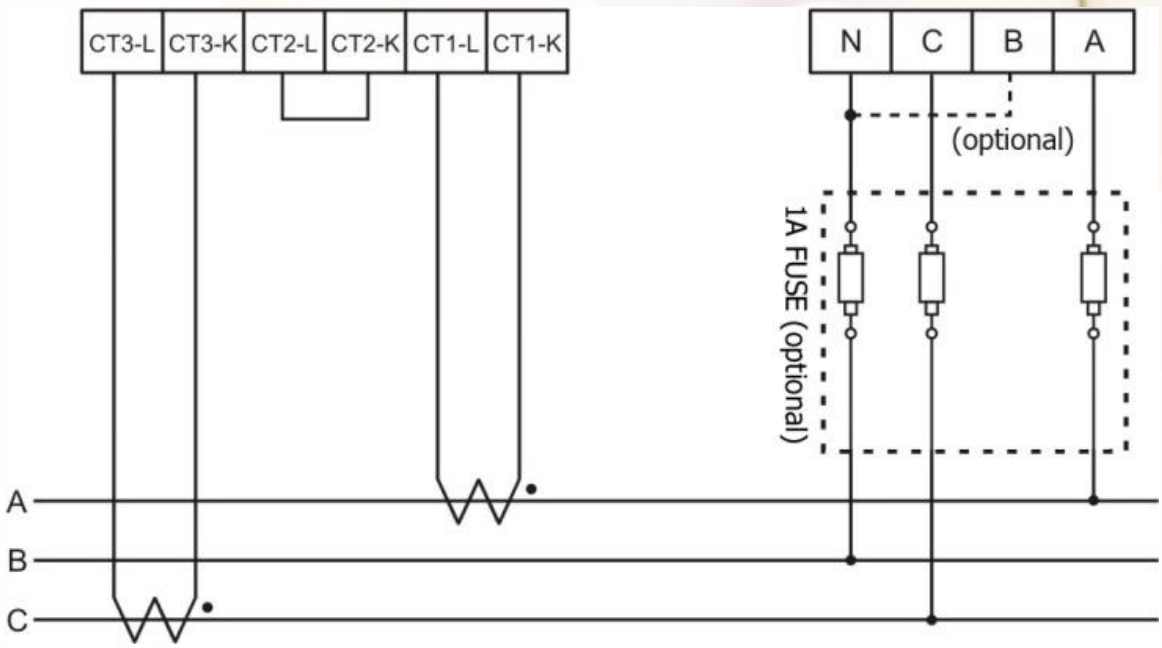


Notes:

1. If phase B is in a floating state, it may pick up induced voltage signals. To avoid this, phase B can be connected to the neutral (N) line.

2. The 3P3W-2CT method is only suitable for **balanced three-phase systems with low harmonic distortion**. For unbalanced loads or systems with significant harmonics, the **3P3W-3CT method** is recommended for accurate measurement. For detailed information, please refer to the Appendix “Questions and Answers” section of the manual.


Copyright © ICP DAS Co., Ltd. All Rights Reserved. www.icpdas.com ✉ E-mail: service@icpdas.com

- 3P3W-3CT (Can be configured via software or DIP switch)

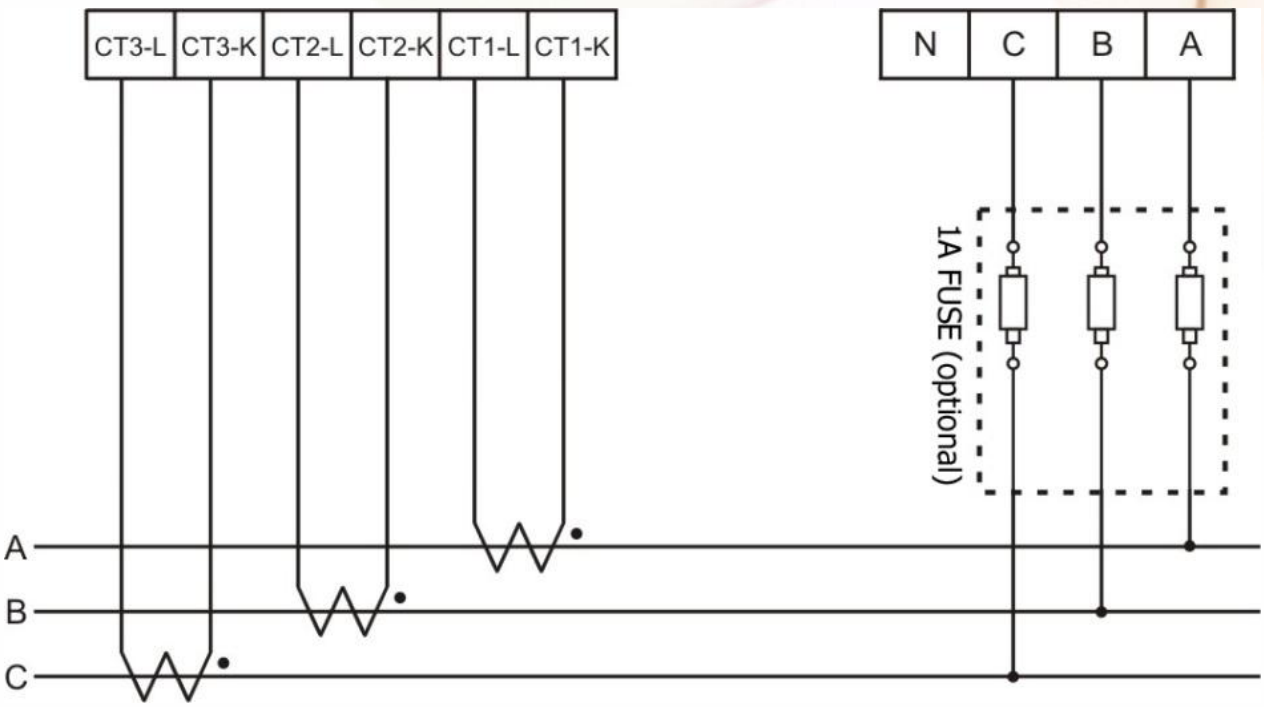



Copyright © ICP DAS Co., Ltd. All Rights Reserved. www.icpdas.com ✉ E-mail: service@icpdas.com

# 5. Relay Output & LED Indicator

## 5.1. Relay

| | |
|---|---|
| Relay type | Power Relay, Form A (SPST N.O.) |
| Operating Voltage Range | 250 VAC/30 VDC |
| Max. Load Current | 5 A at 25 °C |
| Operate Time | 6 ms |
| Release Time | 3 ms |

## 5.2. LED Indicator

The PM-3133 has 4 LED to indicate the unit's power status, RS-485 communication status, and two DO Relay status.

- **RUN:** Green, LED light up when RS-485 is ready. The LED will flash when the unit is processing RS-485 communication.
- **PWR:** Red, LED stay on when the unit is powered.
- **DO0:** Green, LED DO0 lights up when DO0 is "ON".
- **DO1:** Green, LED DO1 lights up when DO1 is "ON".

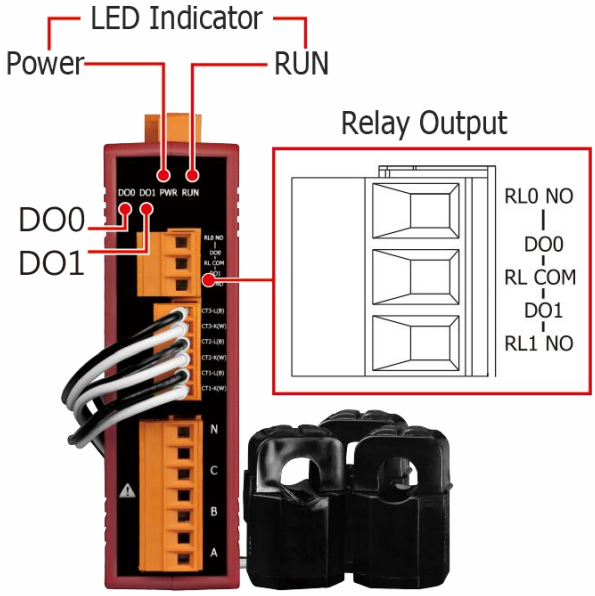



Copyright © ICP DAS Co., Ltd. All Rights Reserved. www.icpdas.com ✉ E-mail: service@icpdas.com

# 6. Modbus-RTU Communication

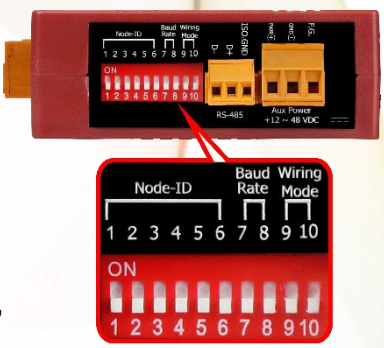


## 6.1. RS-485 Settings

- Default setting for RS-485: **19200**, **n, 8, 1**
- DIP switch (SW1-SW6): Used for setting the Modbus address, with the default set to 1(all switches OFF)
  For example, to set the Modbus address to 10，configure the DIP switches as follows:
  SW1 = ON, SW2 = OFF, SW3 = OFF, SW4 = ON, SW5 = OFF, SW6 = OFF.

- SW1- SW6 Settings

Configure Modbus-RTU communication addresses ranging from 1 to 64. Use the table provided below for specific settings.

| Modbus Address | SW 1 | SW 2 | SW 3 | SW 4 | SW 5 | SW 6 |
|---|---|---|---|---|---|---|
| 1 | OFF | OFF | OFF | OFF | OFF | OFF |
| 2 | **ON** | OFF | OFF | OFF | OFF | OFF |
| 3 | OFF | **ON** | OFF | OFF | OFF | OFF |
| 4 | **ON** | **ON** | OFF | OFF | OFF | OFF |
| 5 | OFF | OFF | **ON** | OFF | OFF | OFF |
| 6 | **ON** | OFF | **ON** | OFF | OFF | OFF |
| 7 | OFF | **ON** | **ON** | OFF | OFF | OFF |
| 8 | **ON** | **ON** | **ON** | OFF | OFF | OFF |
| 9 | OFF | OFF | OFF | **ON** | OFF | OFF |
| 10 | **ON** | OFF | OFF | **ON** | OFF | OFF |
| 11 | OFF | **ON** | OFF | **ON** | OFF | OFF |
| 12 | **ON** | **ON** | OFF | **ON** | OFF | OFF |
| 13 | OFF | OFF | **ON** | **ON** | OFF | OFF |
| 14 | **ON** | OFF | **ON** | **ON** | OFF | OFF |
| 15 | OFF | **ON** | **ON** | **ON** | OFF | OFF |
| 16 | **ON** | **ON** | **ON** | **ON** | OFF | OFF |
| 17 | OFF | OFF | OFF | OFF | **ON** | OFF |
| 18 | **ON** | OFF | OFF | OFF | **ON** | OFF |
| 19 | OFF | **ON** | OFF | OFF | **ON** | OFF |
| 20 | **ON** | **ON** | OFF | OFF | **ON** | OFF |
| 21 | OFF | OFF | **ON** | OFF | **ON** | OFF |
| 22 | **ON** | OFF | **ON** | OFF | **ON** | OFF |
| 23 | OFF | **ON** | **ON** | OFF | **ON** | OFF |
| 24 | **ON** | **ON** | **ON** | OFF | **ON** | OFF |
| 25 | OFF | OFF | OFF | **ON** | **ON** | OFF |
| 26 | **ON** | OFF | OFF | **ON** | **ON** | OFF |
| 27 | OFF | **ON** | OFF | **ON** | **ON** | OFF |


Copyright © ICP DAS Co., Ltd. All Rights Reserved. www.icpdas.com ✉ E-mail: service@icpdas.com

| | | | | | | |
|---|---|---|---|---|---|---|
| 28 | **ON** | **ON** | OFF | **ON** | **ON** | OFF |
| 29 | OFF | OFF | **ON** | **ON** | **ON** | OFF |
| 30 | **ON** | OFF | **ON** | **ON** | **ON** | OFF |
| 31 | OFF | **ON** | **ON** | **ON** | **ON** | OFF |
| 32 | **ON** | **ON** | **ON** | **ON** | **ON** | OFF |
| 33 | OFF | OFF | OFF | OFF | OFF | **ON** |
| 34 | **ON** | OFF | OFF | OFF | OFF | **ON** |
| 35 | OFF | **ON** | OFF | OFF | OFF | **ON** |
| 36 | **ON** | **ON** | OFF | OFF | OFF | **ON** |
| 37 | OFF | OFF | **ON** | OFF | OFF | **ON** |
| 38 | **ON** | OFF | **ON** | OFF | OFF | **ON** |
| 39 | OFF | **ON** | **ON** | OFF | OFF | **ON** |
| 40 | **ON** | **ON** | **ON** | OFF | OFF | **ON** |
| 41 | OFF | OFF | OFF | **ON** | OFF | **ON** |
| 42 | **ON** | OFF | OFF | **ON** | OFF | **ON** |
| 43 | OFF | **ON** | OFF | **ON** | OFF | **ON** |
| 44 | **ON** | **ON** | OFF | **ON** | OFF | **ON** |
| 45 | OFF | OFF | **ON** | **ON** | OFF | **ON** |
| 46 | **ON** | OFF | **ON** | **ON** | OFF | **ON** |
| 47 | OFF | **ON** | **ON** | **ON** | OFF | **ON** |
| 48 | **ON** | **ON** | **ON** | **ON** | OFF | **ON** |
| 49 | OFF | OFF | OFF | OFF | **ON** | **ON** |
| 50 | **ON** | OFF | OFF | OFF | **ON** | **ON** |
| 51 | OFF | **ON** | OFF | OFF | **ON** | **ON** |
| 52 | **ON** | **ON** | OFF | OFF | **ON** | **ON** |
| 53 | OFF | OFF | **ON** | OFF | **ON** | **ON** |
| 54 | **ON** | OFF | **ON** | OFF | **ON** | **ON** |
| 55 | OFF | **ON** | **ON** | OFF | **ON** | **ON** |
| 56 | **ON** | **ON** | **ON** | OFF | **ON** | **ON** |
| 57 | OFF | OFF | OFF | **ON** | **ON** | **ON** |
| 58 | **ON** | OFF | OFF | **ON** | **ON** | **ON** |
| 59 | OFF | **ON** | OFF | **ON** | **ON** | **ON** |
| 60 | **ON** | **ON** | OFF | **ON** | **ON** | **ON** |
| 61 | OFF | OFF | **ON** | **ON** | **ON** | **ON** |
| 62 | **ON** | OFF | **ON** | **ON** | **ON** | **ON** |
| 63 | OFF | **ON** | **ON** | **ON** | **ON** | **ON** |
| 64 | **ON** | **ON** | **ON** | **ON** | **ON** | **ON** |


Copyright © ICP DAS Co., Ltd. All Rights Reserved. www.icpdas.com ✉ E-mail: service@icpdas.com

- SW7 - SW8 Settings

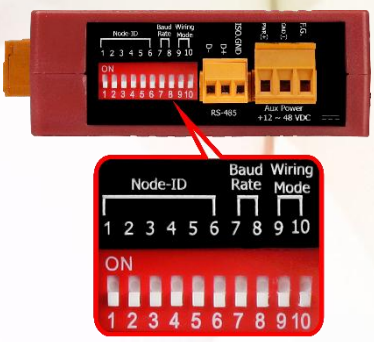


PM-3133: For Baud Rate Setting

| Baud Rate | SW 7 | SW8 |
|---|---|---|
| 9600 bps | OFF | OFF |
| 19200 bps (Default) | **ON** | OFF |
| 38400 bps | OFF | **ON** |
| 115200 bps | **ON** | **ON** |

**Note: For a stable signal on the RS-485 Network, it is recommended to add a bias resistor.** The RS-485 master must provide the bias for PM-3133 series or you can add a tM-SG4 or SG-785 to provide the bias. All ICP DAS controllers and converters are equipped with a built-in bias resistor.


Copyright © ICP DAS Co., Ltd. All Rights Reserved. www.icpdas.com ✉ E-mail: service@icpdas.com

# 6.2. Modbus-RTU Setting

## 6.2.1. Specifications

| | |
|---|---|
| Protocol | Modbus-RTU |
| Transmission Specifications | Bits per Byte：<br>1 start bit<br>8 data bits, least significant bit sent first<br>None Parity<br>1 stop bits<br>Error Check：<br>Cyclical Redundancy Check (CRC) |
| Baud Rate | 9600, 19200 (Default), 38400, 115200 |
| Modbus slave address | 1 to 64 (Default is 1) |

- **Data format**
  **Integer:** 16 bits with sign, occupying 1 register per integer.
  **Unsigned Integer:** 16 bits without sign, occupying 1 register per integer.
  **Float:** IEEE 754 Format, occupying 2 registers, with the low word transmitted first.


Copyright © ICP DAS Co., Ltd. All Rights Reserved. www.icpdas.com ✉ E-mail: service@icpdas.com

**IEEE 754 Format**

Definition of the floating format of the Bits

| Data Hi Word，<br>Hi Byte | Data Hi Word，<br>Lo Byte | Data Lo Word，<br>Hi Byte | Data Lo Word，<br>Lo Byte |
|---|---|---|---|
| SEEE EEEE | EMMM MMMM | MMMM MMMM | MMMM MMMM |

Value = $(-1)^{S} \times (1.M) \times 2^{E-127}$ ,where $0 < E < 255$

**S:** Sign bit, where 1 is negative and 0 is positive

**E:** Exponent with an offset of 127, representing the power of two. For example, an exponent of zero is represented by the value 127, and an exponent of 1 is represented by the value128, and so on.

**M:** Mantissa(23-bit), which represents the fractional part of the number. The highest bit, also known as the implicit leading bit, is always assumed to be1 and is therefore not stored.

Transfer sequence (Float)

| 1 | 2 | 3 | 4 |
|---|---|---|---|
| Data Low Word,<br>High Byte | Data Low Word,<br>Low Byte | Data High Word,<br>High Byte | Data High Word,<br>Low Byte |

Transfer sequence (Inverse Integer)

| 1 | 2 | 3 | 4 |
|---|---|---|---|
| Data High Word,<br>High Byte | Data High Word,<br>Low Byte | Data Low Word,<br>High Byte | Data Low Word,<br>Low Byte |

Transfer sequence (Integer)

| 1 | 2 | 3 | 4 |
|---|---|---|---|
| Data Low Word,<br>High Byte | Data Low Word,<br>Low Byte | Data High Word,<br>High Byte | Data High Word,<br>Low Byte |


Copyright © ICP DAS Co., Ltd. All Rights Reserved. www.icpdas.com ✉ E-mail: service@icpdas.com

## 6.2.2. Modbus Register

- Modbus Table #1 – Coil: Relay Value

| Parameter Name | Modbus Register | | Len | Data Type | Range | Default Value | Comment |
|---|---|---|---|---|---|---|---|
| | Modicon Format (Base 1) | Hex (Base 0) | | | | | |
| DO 0 | 04097 | 0x1000 | Word | Byte | 0 = OFF<br>1 = ON | 0 | |
| DO 1 | 04098 | 0x1001 | Word | Byte | 0 = OFF<br>1 = ON | 0 | |
| DO 0<br>Power On Value | 04113 | 0x1010 | Word | Byte | 0 = OFF<br>1 = ON | 0 | |
| DO 1<br>Power On Value | 04114 | 0x1011 | Word | Byte | 0 = OFF<br>1 = ON | 0 | |

- Modbus Table #2 – Coil: System Boolean Setting Value

| Parameter Name | Modbus Register | | Len | Data Type | Range | Default Value | Comment |
|---|---|---|---|---|---|---|---|
| | Modicon Format | Hex | | | | | |
| Enable VLL Compensation | 00001 | 0x0000 | Word | Byte | 0 = OFF<br>1 = ON | 0 | Only work for 3P3W3CT wiring |
| Disable HW Wiring Dipswitch | 00002 | 0x0001 | Word | Byte | 0 = OFF<br>1 = ON | 0 | [sw9,sw10] always in software mode |
| Enable Phase B Zero Voltage | 00003 | 0x0002 | Word | Byte | 0 = OFF<br>1 = ON | 0 | Refer to Q18 |


Copyright © ICP DAS Co., Ltd. All Rights Reserved. www.icpdas.com ✉ E-mail: service@icpdas.com

- Modbus Table #3 – Holding Register: System Parameter Setting

| Parameter Name | Modbus Register | | Len | Data Type | Range | Default Value | Units | Comment |
|---|---|---|---|---|---|---|---|---|
| | Modicon Format | Hex | | | | | | |
| Parity | 44098 | 0x1001 | Word | UInt | 0: None<br>1: Odd Parity<br>2: Even Parity | 0 | | Only work for RS-485 Interface |
| Stop Bit | 44099 | 0x1002 | Word | UInt | 1: 1 stop bit<br>2: 2 stop bits | 1 | | Only work for RS-485 Interface |
| PT_Ratio | 44100 | 0x1003 | Word | UInt | 1-65535 | 100 | 0.01 | |
| CT_Ratio | 44101 | 0x1004 | Word | UInt | 1-65535 | 1 | 1 | |
| Wiring Mode | 44107 | 0x100A | Word | UInt | 1: 1P2W<br>2: 1P3W<br>3: 3P3W2CT<br>4: 3P3W3CT<br>5: 3P4W3CT | 5 | | Only work when SW9-SW10 is all off |
| Set Energy to Zero | 44108 | 0x100B | Word | UInt | 0x0055 | | | Only Write |
| Reset to Factory Settings | 44109 | 0x100C | Word | UInt | 0x0055 | | | Only Write, Re-power the module after setting |
| Default Frequency | 44110 | 0x100D | Word | UInt | 0x0055: Auto* (See Note)<br>0x0064: 50Hz<br>0x0078: 60Hz | 0x0055 | | Re-power the module after setting or changing the frequency |
| Energy Absolute Accumulated Mode | 44113 | 0x1010 | Word | UInt | 0: Enable<br>1: Disable | 0 | | |

***Note (Auto mode only):**

Frequency detection is performed at power-up.

To ensure correct detection of **50 / 60 Hz**, **apply the measurement voltage before powering on the meter**.



Copyright © ICP DAS Co., Ltd. All Rights Reserved. www.icpdas.com ✉ E-mail: service@icpdas.com

| | | | | | | | | |
|---|---|---|---|---|---|---|---|---|
| Harmonic Phase Select | 44114 | 0x1011 | Word | UInt | 0: Disable<br>1: Phase A<br>2: Phase B<br>3: Phase C | 0 | | |
| Display Voltage | 44115 | 0x1012 | Word | UInt | 0: Default<br>1: Show as Vln<br>2: Show as Vll | 0 | | Refer to Q11 |
| CT Ratio Scale | 44122 | 0x1019 | Word | UInt | 6~10~14 | 10 | | Refer to Q15 |
| Max Value of Accumulated Energy | 44131 | 0x1022 | Word | UInt | 0: 9999999.9<br>1: 99999999.9<br>2: 999999999.9 | 0 | | |
| PT Ratio Scale | 44132 | 0x1023 | Word | UInt | 6~10~14 | 8 | | Refer to Q15 |


Copyright © ICP DAS Co., Ltd. All Rights Reserved. www.icpdas.com ✉ E-mail: service@icpdas.com

- Modbus Table #4 – Input Register: System Information

| Parameter Name | Modbus Register | | Len | Data Type | Range | Default Value | Units | Comment |
|---|---|---|---|---|---|---|---|---|
| | Modicon Format | Hex | | | | | | |
| Wiring Type | 30513 | 0x0200 | Word | UInt | 9: 1P2W<br>10: 1P3W<br>11: 3P3W2CT<br>12: 3P3W3CT<br>13: 3P4W<br>14: 3P3W2CT (HW)<br>15: 3P3W3CT (HW)<br>16: 3P4W (HW) | 13 | | (HW): set wiring by hardware Dip Switch |
| Phase Sequence | 30514 | 0x0201 | Word | UInt | 0: Negative (ACB)<br>1: Positive (ABC)<br>2: Not Ready | | | Only work when 3P4W |
| Model Name | 30515 | 0x0202 | Word | UInt | 3133: PM-3133 | 3133 | | |
| Model Type | 30516 | 0x0203 | Word | UInt | 0x0001: 50Hz<br>0x0002: 60Hz | 0x0002 | | |
| Firmware Version | 30517 | 0x0204 | Word | BCD | | 0x0100 | | Ver. 1.0 |


Copyright © ICP DAS Co., Ltd. All Rights Reserved. www.icpdas.com ✉ E-mail: service@icpdas.com

- Modbus Table #5 – Input Register: Power value (Float)

| Parameter Name | Modbus Register | | Len | Data Type | Range | Units | Comment |
|---|---|---|---|---|---|---|---|
| | Modicon Format | Hex | | | | | |
| V_a | 34353-34354 | 0x1100-0x1101 | DWord | Float | | Volt | Refer to Q11 |
| I_a | 34355-34356 | 0x1102-0x1103 | DWord | Float | | Amp | |
| kW_a | 34357-34358 | 0x1104-0x1105 | DWord | Float | | kW | |
| kvar_a | 34359-34360 | 0x1106-0x1107 | DWord | Float | | kvar | |
| kVA_a | 34361-34362 | 0x1108-0x1109 | DWord | Float | | kVA | |
| PF_a | 34363-34364 | 0x110A-0x110B | DWord | Float | 0~1 | | |
| kWh_a | 34365-34366 | 0x110C-0x110D | DWord | Float | | | ±0~9999999.9 |
| kvarh_a | 34367-34368 | 0x110E-0x110F | DWord | Float | | | ±0~9999999.9 |
| kVAh_a | 34369-34370 | 0x1110-0x1111 | DWord | Float | | | ±0~9999999.9 |
| V_b | 34371-34372 | 0x1112-0x1113 | DWord | Float | | Volt | Refer to Q11 |
| I_b | 34373-34374 | 0x1114-0x1115 | DWord | Float | | Amp | |
| kW_b | 34375-34376 | 0x1116-0x1117 | DWord | Float | | kW | |
| kvar_b | 34377-34378 | 0x1118-0x1119 | DWord | Float | | kvar | |
| kVA_b | 34379-34380 | 0x111A-0x111B | DWord | Float | | kVA | |
| PF_b | 34381-34382 | 0x111C-0x111D | DWord | Float | 0~1 | | |
| kWh_b | 34383-34384 | 0x111E-0x111F | DWord | Float | | | |
| kvarh_b | 34385-34386 | 0x1120-0x1121 | DWord | Float | | | |
| kVAh_b | 34387-34388 | 0x1122-0x1123 | DWord | Float | | | |
| V_c | 34389-34390 | 0x1124-0x1125 | DWord | Float | | Volt | Refer to Q11 |
| I_c | 34391-34392 | 0x1126-0x1127 | DWord | Float | | Amp | |
| kW_c | 34393-34394 | 0x1128-0x1129 | DWord | Float | | kW | |
| kvar_c | 34395-34396 | 0x112A-0x112B | DWord | Float | | kvar | |
| kVA_c | 34397-34398 | 0x112C-0x112D | DWord | Float | | kVA | |
| PF_c | 34399-34400 | 0x112E-0x112F | DWord | Float | 0~1 | | |
| kWh_c | 34401-34402 | 0x1130-0x1131 | DWord | Float | | | |
| kvarh_c | 34403-34404 | 0x1132-0x1133 | DWord | Float | | | |
| kVAh_c | 34405-34406 | 0x1134-0x1135 | DWord | Float | | | |
| V_avg | 34407-34408 | 0x1136-0x1137 | DWord | Float | | Volt | |
| I_avg | 34409-34410 | 0x1138-0x1139 | DWord | Float | | Amp | |
| kW_tot | 34411-34412 | 0x113A-0x113B | DWord | Float | | kW | |
| kvar_tot | 34413-34414 | 0x113C-0x113D | DWord | Float | | kvar | |
| kVA_tot | 34415-34416 | 0x113E-0x113F | DWord | Float | | kVA | |


Copyright © ICP DAS Co., Ltd. All Rights Reserved. www.icpdas.com ✉ E-mail: service@icpdas.com

| | | | | | | | |
|---|---|---|---|---|---|---|---|
| PF_tot | 34417-34418 | 0x1140-0x1141 | DWord | Float | 0~1 | | |
| kWh_tot | 34419-34420 | 0x1142-0x1143 | DWord | Float | | | |
| kvarh_tot | 34421-34422 | 0x1144-0x1145 | DWord | Float | | | |
| kVAh_tot | 34423-34424 | 0x1146-0x1147 | DWord | Float | | | |
| Freq_a | 34425-34426 | 0x1148-0x1149 | DWord | Float | 45~65 | Hz | |
| Freq_b | 34427-34428 | 0x114A-0x114B | DWord | Float | 45~65 | Hz | |
| Freq_c | 34429-34430 | 0x114C-0x114D | DWord | Float | 45~65 | Hz | |
| Freq_max | 34431-34432 | 0x114E-0x114F | DWord | Float | 45~65 | Hz | |
| VTHD | 34459-34460 | 0x116A-0x116B | DWord | Float | | | Phase set by **Harmonic Phase Select** Register |
| ITHD | 34461-34462 | 0x116C-0x116D | DWord | Float | | | |
| Bi_Positive _kWh | 34463-34464 | 0x116E-0x116F | DWord | Float | | | |
| Bi_Negative _kWh | 34465-34466 | 0x1170-0x1171 | DWord | Float | | | |
| Bi_Net _kWh | 34467-34468 | 0x1172-0x1173 | DWord | Float | | | |
| Bi_Total _kWh | 34469-34470 | 0x1174-0x1175 | DWord | Float | | | |
| Signed PF _A | 34515-34516 | 0x11A2-0x11A3 | DWord | Float | -2~+2 | | Refer to Q16 |
| Signed PF _B | 34517-34518 | 0x11A4-0x11A5 | DWord | Float | -2~+2 | | Refer to Q16 |
| Signed PF _C | 34519-34520 | 0x11A6-0x11A7 | DWord | Float | -2~+2 | | Refer to Q16 |
| Signed PF _Total | 34521-34522 | 0x11A8-0x11A9 | DWord | Float | -2~+2 | | Refer to Q16 |

**Note:**

The definition of bi-direction energy registers:

- **Bi_Positive_kWh:** = Sum( absolute( all channel's positive kWh in every sec.))
- **Bi_Negative_kWh:** = Sum( absolute( all channel's negative kWh in every sec.))
- **Bi_Net_kWh:** = Sum( all channel's kWh in every sec. )
- **Bi_Total_kWh:** = Sum( absolute( all channels kWh in every sec. ))


Copyright © ICP DAS Co., Ltd. All Rights Reserved. www.icpdas.com ✉ E-mail: service@icpdas.com

- Modbus Table #6 – Input Register: Power value (Inverse Integer)

| Parameter Name | Modbus Register | | Len | Data Type | Range | Units | Comment |
|---|---|---|---|---|---|---|---|
| | Modicon Format | Hex | | | | | |
| V_a | 34609- 34610 | 0x1200-0x1201 | DWord | UInt32 | | 0.1 Volt | |
| I_a | 34611- 34612 | 0x1202-0x1203 | DWord | UInt32 | | 0.1A | |
| kW_a | 34613- 34614 | 0x1204-0x1205 | DWord | Int32 | | 0.1kW | |
| kvar_a | 34615- 34616 | 0x1206-0x1207 | DWord | Int32 | | 0.1kvar | |
| kVA_a | 34617- 34618 | 0x1208-0x1209 | DWord | Int32 | | 0.1kVA | |
| PF_a | 34619 | 0x120A | Word | Int | 0~1000 | 0.001PF | 0~1.000 |
| kWh_a | 34620- 34621 | 0x120B-0x120C | DWord | Int32 | ±0~99999999 | 0.1kWh | ±0~9999999.9 |
| kvarh_a | 34622- 34623 | 0x120D-0x120E | DWord | Int32 | ±0~99999999 | 0.1kvarh | ±0~9999999.9 |
| kVAh_a | 34624- 34625 | 0x120F-0x1210 | DWord | Int32 | 0~99999999 | 0.1kVAh | 0~9999999.9 |
| V_b | 34626- 34627 | 0x1211-0x1212 | DWord | UInt32 | | 0.1 Volt | |
| I_b | 34628- 34629 | 0x1213-0x1214 | DWord | UInt32 | | 0.1A | |
| kW_b | 34630- 34631 | 0x1215-0x1216 | DWord | Int32 | | 0.1kW | |
| kvar_b | 34632- 34633 | 0x1217-0x1218 | DWord | Int32 | | 0.1kvar | |
| kVA_b | 34634- 34635 | 0x1219-0x121A | DWord | Int32 | | 0.1kVA | |
| PF_b | 34636 | 0x121B | Word | Int | 0~1000 | 0.001PF | 0~1.000 |
| kWh_b | 34637- 34638 | 0x121C-0x121D | DWord | Int32 | ±0~99999999 | 0.1kWh | ±0~9999999.9 |
| kvarh_b | 34639- 34640 | 0x121E-0x121F | DWord | Int32 | ±0~99999999 | 0.1kvarh | ±0~9999999.9 |
| kVAh_b | 34641- 34642 | 0x1220-0x1221 | DWord | Int32 | 0~99999999 | 0.1kVAh | 0~9999999.9 |
| V_c | 34643- 34644 | 0x1222-0x1223 | DWord | UInt32 | | 0.1 Volt | |
| I_c | 34645- 34646 | 0x1224-0x1225 | DWord | UInt32 | | 0.1A | |
| kW_c | 34647- 34648 | 0x1226-0x1227 | DWord | Int32 | | 0.1kW | |
| kvar_c | 34649- 34650 | 0x1228-0x1229 | DWord | Int32 | | 0.1kvar | |
| kVA_c | 34651- 34652 | 0x122A-0x122B | DWord | Int32 | | 0.1kVA | |
| PF_c | 34653 | 0x122C | Word | Int | 0~1000 | 0.001PF | 0~1.000 |
| kWh_c | 34654- 34655 | 0x122D-0x122E | DWord | Int32 | ±0~99999999 | 0.1kWh | ±0~9999999.9 |
| kvarh_c | 34656-34657 | 0x122F-0x1230 | DWord | Int32 | ±0~99999999 | 0.1kvarh | ±0~9999999.9 |
| kVAh_c | 34658-34659 | 0x1231-0x1232 | DWord | Int32 | 0~99999999 | 0.1kVAh | 0~9999999.9 |
| V_avg | 34660-34661 | 0x1233-0x1234 | DWord | UInt32 | | 0.1 Volt | |
| I_avg | 34662-34663 | 0x1235-0x1236 | DWord | UInt32 | | 0.1A | |
| kW_tot | 34664-34665 | 0x1237-0x1238 | DWord | Int32 | | 0.1kW | |
| kvar_tot | 34666-34667 | 0x1239-0x123A | DWord | Int32 | | 0.1kvar | |
| kVA_tot | 34668-34669 | 0x123B-0x123C | DWord | Int32 | | 0.1kVA | |


Copyright © ICP DAS Co., Ltd. All Rights Reserved. www.icpdas.com ✉ E-mail: service@icpdas.com

| | | | | | | | |
|---|---|---|---|---|---|---|---|
| PF_tot | 34670 | 0x123D | Word | Int | 0~1000 | 0.001PF | 0~1.000 |
| kWh_tot | 34671-34672 | 0x123E-0x123F | DWord | Int32 | ±0~99999999 | 0.1kWh | ±0~9999999.9 |
| kvarh_tot | 34673-34674 | 0x1240-0x1241 | DWord | Int32 | ±0~99999999 | 0.1kvarh | ±0~9999999.9 |
| kVAh_tot | 34675-34676 | 0x1242-0x1243 | DWord | Int32 | 0~99999999 | 0.1kVAh | 0~9999999.9 |
| Freq_a | 34677 | 0x1244 | Word | Int | 45~65 | 1Hz | 45~65 |
| Freq_b | 34678 | 0x1245 | Word | Int | 45~65 | 1Hz | 45~65 |
| Freq_c | 34679 | 0x1246 | Word | Int | 45~65 | 1Hz | 45~65 |
| Freq_max | 34680 | 0x1247 | Word | Int | 45~65 | 1Hz | 45~65 |


Copyright © ICP DAS Co., Ltd. All Rights Reserved. www.icpdas.com ✉ E-mail: service@icpdas.com

- Modbus Table #7 – Input Register: Power value (Integer)

| Parameter Name | Modbus Register | | Len | Data Type | Range | Units | Comment |
|---|---|---|---|---|---|---|---|
| | Modicon Format | Hex | | | | | |
| V_a | 34865-34866 | 0x1300-0x1301 | DWord | UInt32 | | 0.1 Volt | |
| I_a | 34867-34868 | 0x1302-0x1303 | DWord | UInt32 | | 0.1A | |
| kW_a | 34869-34870 | 0x1304-0x1305 | DWord | Int32 | | 0.1kW | |
| kvar_a | 34871-34872 | 0x1306-0x1307 | DWord | Int32 | | 0.1kvar | |
| kVA_a | 34873-34874 | 0x1308-0x1309 | DWord | Int32 | | 0.1kVA | |
| PF_a | 34875 | 0x130A | Word | Int | 0~1000 | 0.001PF | 0~1.000 |
| kWh_a | 34876-34877 | 0x130B-0x130C | DWord | Int32 | ±0~99999999 | 0.1kWh | ±0~9999999.9 |
| kvarh_a | 34878-34879 | 0x130D-0x130E | DWord | Int32 | ±0~99999999 | 0.1kvarh | ±0~9999999.9 |
| kVAh_a | 34880-34881 | 0x130F-0x1310 | DWord | Int32 | 0~99999999 | 0.1kVAh | 0~9999999.9 |
| V_b | 34882-34883 | 0x1311-0x1312 | DWord | UInt32 | | 0.1 Volt | |
| I_b | 34884-34885 | 0x1313-0x1314 | DWord | UInt32 | | 0.1A | |
| kW_b | 34886-34887 | 0x1315-0x1316 | DWord | Int32 | | 0.1kW | |
| kvar_b | 34888-34889 | 0x1317-0x1318 | DWord | Int32 | | 0.1kvar | |
| kVA_b | 34890-34891 | 0x1319-0x131A | DWord | Int32 | | 0.1kVA | |
| PF_b | 34892 | 0x131B | Word | Int | 0~1000 | 0.001PF | 0~1.000 |
| kWh_b | 34893-34894 | 0x131C-0x131D | DWord | Int32 | ±0~99999999 | 0.1kWh | ±0~9999999.9 |
| kvarh_b | 34895-34896 | 0x131E-0x131F | DWord | Int32 | ±0~99999999 | 0.1kvarh | ±0~9999999.9 |
| kVAh_b | 34897-34898 | 0x1320-0x1321 | DWord | Int32 | 0~99999999 | 0.1kVAh | 0~9999999.9 |
| V_c | 34899-34900 | 0x1322-0x1323 | DWord | UInt32 | | 0.1 Volt | |
| I_c | 34901-34902 | 0x1324-0x1325 | DWord | UInt32 | | 0.1A | |
| kW_c | 34903-34904 | 0x1326-0x1327 | DWord | Int32 | | 0.1kW | |
| kvar_c | 34905-34906 | 0x1328-0x1329 | DWord | Int32 | | 0.1kvar | |
| kVA_c | 34907-34908 | 0x132A-0x132B | DWord | Int32 | | 0.1kVA | |
| PF_c | 34909 | 0x132C | Word | Int | 0~1000 | 0.001PF | 0~1.000 |
| kWh_c | 34910-34911 | 0x132D-0x132E | DWord | Int32 | ±0~99999999 | 0.1kWh | ±0~9999999.9 |
| kvarh_c | 34912-34913 | 0x132F-0x1330 | DWord | Int32 | ±0~99999999 | 0.1kvarh | ±0~9999999.9 |
| kVAh_c | 34914-34915 | 0x1331-0x1332 | DWord | Int32 | 0~99999999 | 0.1kVAh | 0~9999999.9 |
| V_avg | 34916-34917 | 0x1333-0x1334 | DWord | UInt32 | | 0.1 Volt | |
| I_avg | 34918-34919 | 0x1335-0x1336 | DWord | UInt32 | | 0.1A | |
| kW_tot | 34920-34921 | 0x1337-0x1338 | DWord | Int32 | | 0.1kW | |


Copyright © ICP DAS Co., Ltd. All Rights Reserved. www.icpdas.com ✉ E-mail: service@icpdas.com

| | | | | | | | |
|---|---|---|---|---|---|---|---|
| kvar_tot | 34922-34923 | 0x1339-0x133A | DWord | Int32 | | 0.1kvar | |
| kVA_tot | 34924-34925 | 0x133B-0x133C | DWord | Int32 | | 0.1kVA | |
| PF_tot | 34926 | 0x133D | Word | Int | 0~1000 | 0.001PF | 0~1.000 |
| kWh_tot | 34927-34928 | 0x133E-0x133F | DWord | Int32 | ±0~99999999 | 0.1kWh | ±0~9999999.9 |
| kvarh_tot | 34929-34930 | 0x1340-0x1341 | DWord | Int32 | ±0~99999999 | 0.1kvarh | ±0~9999999.9 |
| kVAh_tot | 34931-34932 | 0x1342-0x1343 | DWord | Int32 | 0~99999999 | 0.1kVAh | 0~9999999.9 |
| Freq_a | 34933 | 0x1344 | Word | Int | 45~65 | 1Hz | 45~65 |
| Freq_b | 34934 | 0x1345 | Word | Int | 45~65 | 1Hz | 45~65 |
| Freq_c | 34935 | 0x1346 | Word | Int | 45~65 | 1Hz | 45~65 |
| Freq_max | 34936 | 0x1347 | Word | Int | 45~65 | 1Hz | 45~65 |


Copyright © ICP DAS Co., Ltd. All Rights Reserved. www.icpdas.com ✉ E-mail: service@icpdas.com

# 7. Modbus-TCP Communication

## 7.1. Default Settings




Ethernet default settings:

| | |
|---|---|
| **IP Address** | **192.168.255.1** |
| **Subnet mask** | **255.255.0.0** |
| **Gateway** | **192.168.0.1** |
| **Port** | **502** |

To restore the default settings, set the **Init/Run Switch (SW 4)** to the **Init** position for 10 seconds after powering on. The settings will reset to their default values. After the reset, switch back to the **Run** position and power on again. Alternatively, users can restore the default settings using a **Modbus command**.

- SW1- SW2 Settings

  For the PM-3133, select the appropriate wiring mode:
  (use the Software setting for 1P2W-1CT or 1P3W-2CT)

| Wiring | SW 1 | SW 2 |
|---|---|---|
| Software setting | OFF | OFF |
| 3P3W-2CT | **ON** | OFF |
| 3P3W-3CT | OFF | **ON** |
| 3P4W-3CT | **ON** | **ON** |


Copyright © ICP DAS Co., Ltd. All Rights Reserved. www.icpdas.com ✉ E-mail: service@icpdas.com

# 7.1.1. Ethernet Configurations

In the **Power Meter Utility**, select **"Modbus TCP"** under the **Communication Interface**.

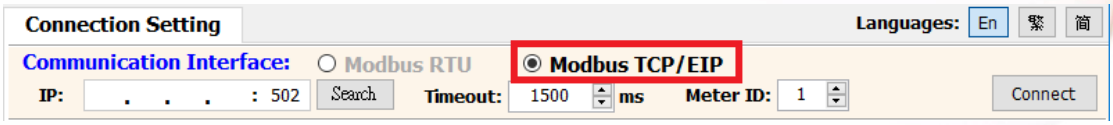


Click "**Search**" to access the "**Communication Interface Setting**" window.

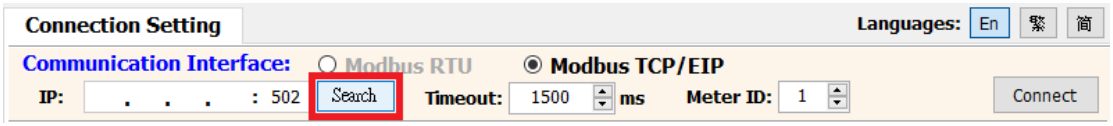


Click **"Search"** button to locate available power meter.

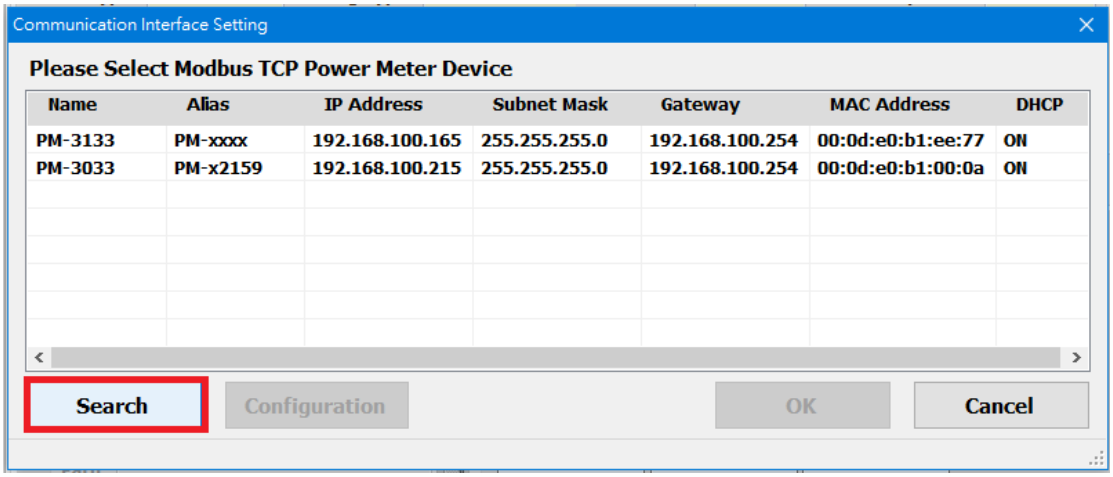



Copyright © ICP DAS Co., Ltd. All Rights Reserved. www.icpdas.com ✉ E-mail: service@icpdas.com

Select the power meter you want to configure from the list, then click the "**Configuration**" button to adjust the meter parameters. After completing all settings, click "**OK**" to return to the meter list window.

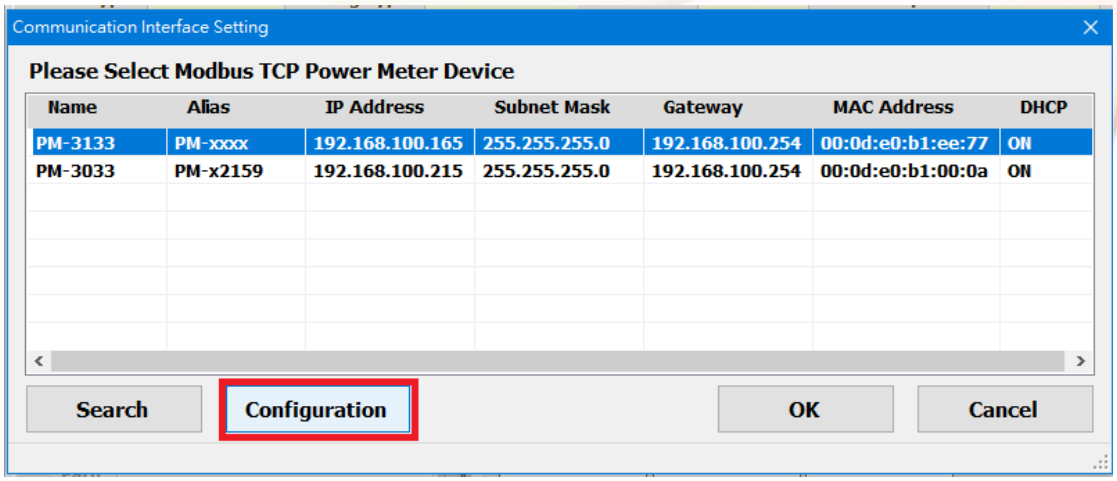


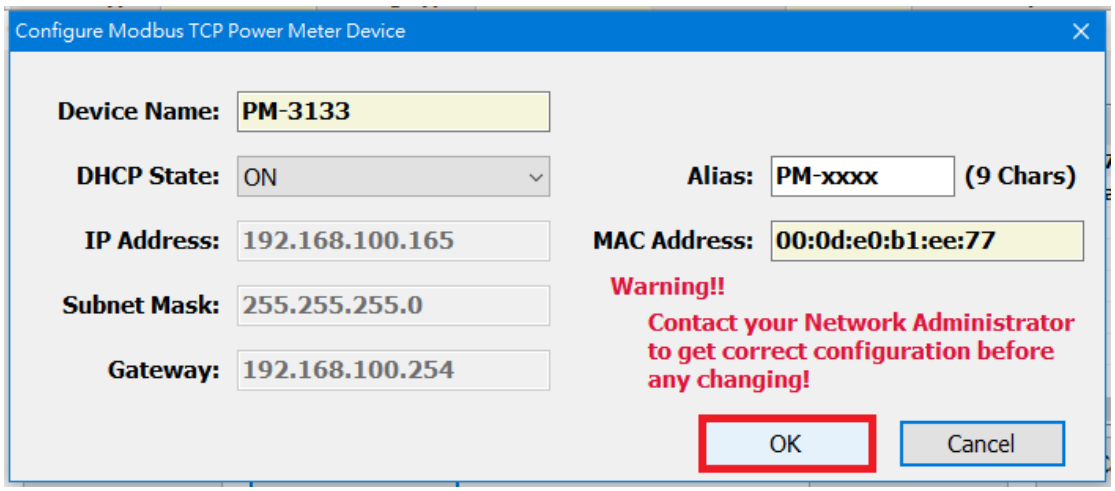



Copyright © ICP DAS Co., Ltd. All Rights Reserved. www.icpdas.com ✉ E-mail: service@icpdas.com

## 7.2. Connecting the Power Meter and Host PC

### 7.2.1. Without PoE (Power over Ethernet)

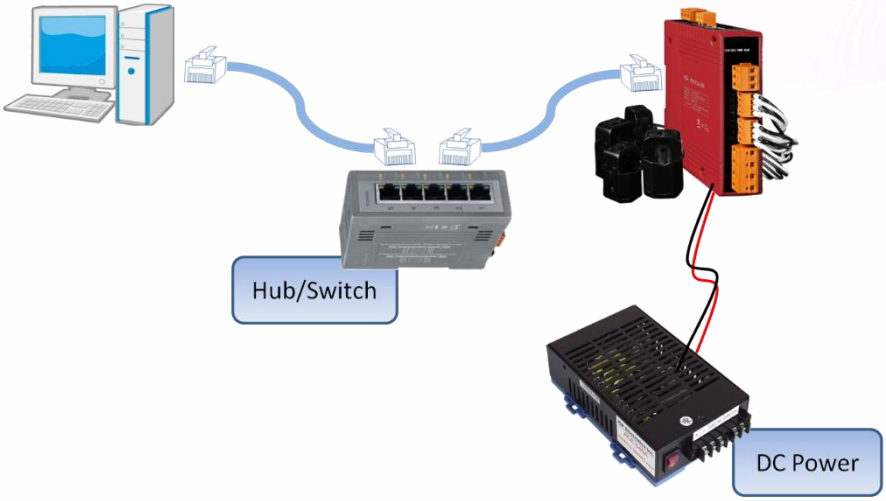


### 7.2.2. With PoE (Power over Ethernet)

The PM-3133-xxx-MTCP module can be powered by an **IEEE802.3af** compliant PoE switch. Both Ethernet and power can be carried by an Ethernet cable eliminating the need for additional wiring and power supply.





Copyright © ICP DAS Co., Ltd. All Rights Reserved. www.icpdas.com ✉ E-mail: service@icpdas.com

# 8. EtherNet/IP Communication




## 8.1. Default Settings

Default settings:

| | |
|---|---|
| **IP Address** | **192.168.255.1** |
| **Subnet mask** | **255.255.0.0** |
| **Gateway** | **192.168.0.1** |

To restore the default settings, set the **Init/Run Switch (SW 4)** to **Init** position for 10 seconds after powering on. The settings will reset to their default values. After the reset, switch back to the **Run** position and power on again.

- SW1- SW2 Settings

For the PM-3133, select the appropriate wiring mode
(use the Software setting for 1P2W-1CT or 1P3W-2CT)

| Wiring | SW 1 | SW 2 |
|---|---|---|
| Software setting | OFF | OFF |
| 3P3W-2CT | **ON** | OFF |
| 3P3W-3CT | OFF | **ON** |
| 3P4W-3CT | **ON** | **ON** |

### 8.1.1. Utility configurations

The PM-3133-EIP power meter modules can be configured using the Power Meter Utility. For detailed instructions on how to use the utility, please refer to section 7.1.1.


Copyright © ICP DAS Co., Ltd. All Rights Reserved. www.icpdas.com ✉ E-mail: service@icpdas.com

## 8.2. EtherNet/IP Protocol

The power meter provides an EtherNet/IP adapter function. This section introduces the power meter's EtherNet/IP Object Model and explains how to read from and write to the power meter by using the Explicit and Implicit Messages through the EtherNet/IP protocol.

### 8.2.1. Object Model

The EtherNet/IP adapter of the power meter provides six different objects, each serving specific functions with defined characteristics, services and instances:

- **Connection Manager Object:**
  Manages the establishment and maintenance of connections, handling the transmission of Explicit Messages and Implicit Messages.
- **Message Router Object:**
  Routes incoming messages to the correct object within the EtherNet/IP adapter for processing based on the target object ID and instance ID.
- **Assembly Object:**
  Organizes and manages I/O data by packaging multiple I/O data points into a structured data collection, facilitating efficient data transmission and exchange.
- **Identity Object:**
  Stores basic device information such as device identification, model, serial number, and status, aiding in device recognition and management.
- **TCP/IP Object:**
  Handles TCP/IP settings, including network parameters like IP address, subnet mask, and gateway configuration.
- **Ethernet Link Object:**
  Monitors and manages the status of the Ethernet connection, including link speed, connection status, and error statistics.


Copyright © ICP DAS Co., Ltd. All Rights Reserved. www.icpdas.com ✉ E-mail: service@icpdas.com

When the power meter receives an EtherNet/IP message, it determines whether it is an Explicit or Implicit Message:

- **Explicit Messages** can either access the Assembly Object directly or reach other objects via the Message Router Object.
- **Implicit Messages** are limited to accessing I/O data from the Assembly Object.

**Unconnected Message Manager(UCMM)**

- UCMM messages allow communication with any object without establishing a connection.
- When a UCMM message is received, it is routed via the Message Router Object.
- During communication between an EtherNet/IP scanner and the power meter's EtherNet/IP adapter, the power meter responds with the appropriate data based on the request.


Copyright © ICP DAS Co., Ltd. All Rights Reserved. www.icpdas.com ✉ E-mail: service@icpdas.com

## 8.2.2. Explicit Message

Explicit Messages are used to access all objects within the object model. Before sending Explicit Messages, a connection must be established. The process is as follows:

1. Connection Establishment:
   - Use the **Forward Open** service of the **Connection Manager Object** to establish the connection.
   - This service ensures a stable communication link between the scanner and the power meter.

2. Data Transmission:
   - Once the connection is established, the scanner can use Explicit Messages to perform read or write operations on the power meter's objects.
   - For example, it can read voltage values from the power meter or configure certain parameters.


Copyright © ICP DAS Co., Ltd. All Rights Reserved. www.icpdas.com ✉ E-mail: service@icpdas.com

## 8.2.3. Implicit Message

Implicit Messages are used specifically for high real-time data exchange requirements. The main features are as follows:

1. Purpose:
   - Implicit Messages are specifically used to access the Input Instance (65hex) and Output Instance (66hex) of the Assembly Object, enabling real-time I/O data exchange.

2. Connection Establishment:
   - Similar to Explicit Messages, Implicit Messages also require a connection to be established before use.
   - The Forward Open service of the Connection Manager Object must be used to establish the connection between the EtherNet/IP scanner and the power meter. Once the connection is established, the scanner can start transmitting Implicit Messages.

3. Data Format:
   - All data in the Input and Output Instances is structured in BYTE format.
   - Regardless of whether the original data format is 1-bit, WORD, or another type, all register data is allocated to the Assembly Object's Instances in BYTE format.

4. Instance IDs and Data Sizes:
   - The **PM-3133-EIP** instance ID and their corresponding data sizes are as follows:

| Implicit Message Information | | |
|---|---|---|
| **Name** | **Instance ID** | **Data Length** |
| **Input(T->O)** | $65_{hex}$ (101) | 145 |
| **Output(O->T)** | $66_{hex}$ (102) | 6 |
| **Configuration** | $64_{hex}$ (100) | 0 |


Copyright © ICP DAS Co., Ltd. All Rights Reserved. www.icpdas.com ✉ E-mail: service@icpdas.com

## 8.2.4. Power Meter Data Frame

The power meter measurements are represented as floating-point values. Each float value is encoded using a 4-byte hexadecimal format(Hex value).
For example, if the float value is 1.234, the corresponding hexadecimal value would be 0x3F9DF3B6. This 4-byte Hex value is transmitted as a byte array in the following format:

| **Float value** | | **1.234** |
|---|---|---|
| **Hex value** | | 0x3F9DF3B6 |
| **Byte Array** | Byte 1 | 0xB6 |
| | Byte 2 | 0xF3 |
| | Byte 3 | 0x9D |
| | Byte 4 | 0x3F |

**The EherNet/IP input data frame:**

| **Float format** | | |
|---|---|---|
| Item | Description | Byte index |
| V_a | Phase A VRMS | 1 |
| | | 2 |
| | | 3 |
| | | 4 |
| I_a | Phase A IRMS | 5 |
| | | 6 |
| | | 7 |
| | | 8 |
| kW_a | Phase A kWatt | 9 |
| | | 10 |
| | | 11 |
| | | 12 |
| kVAR_a | Phase A VAR | 13 |
| | | 14 |
| | | 15 |
| | | 16 |
| kA_a | Phase A kA | 17 |
| | | 18 |
| | | 19 |
| | | 20 |


Copyright © ICP DAS Co., Ltd. All Rights Reserved. www.icpdas.com ✉ E-mail: service@icpdas.com

| | | |
|---|---|---|
| PF_a | Phase A PF | 21 |
| | | 22 |
| | | 23 |
| | | 24 |
| WH_a | Phase A WH | 25 |
| | | 26 |
| | | 27 |
| | | 28 |
| VARH_a | Phase A VARH | 29 |
| | | 30 |
| | | 31 |
| | | 32 |
| VAH_a | Phase A VAH | 33 |
| | | 34 |
| | | 35 |
| | | 36 |

| | | |
|---|---|---|
| V_b | Phase B VRMS | 40 |
| | | 41 |
| | | 42 |
| | | 43 |
| I_b | Phase B IRMS | 44 |
| | | 45 |
| | | 46 |
| | | 47 |
| kW_b | Phase B kWatt | 48 |
| | | 49 |
| | | 50 |
| | | 51 |
| kVAR_b | Phase B VAR | 52 |
| | | 53 |
| | | 54 |
| | | 55 |
| kA_b | Phase B kA | 56 |
| | | 57 |
| | | 58 |


Copyright © ICP DAS Co., Ltd. All Rights Reserved. www.icpdas.com ✉ E-mail: service@icpdas.com

| | | |
|---|---|---|
| | | 59 |
| PF_b | Phase B PF | 60 |
| | | 61 |
| | | 62 |
| | | 63 |
| WH_b | Phase B WH | 64 |
| | | 65 |
| | | 66 |
| | | 67 |
| VARH_b | Phase B VARH | 68 |
| | | 69 |
| | | 70 |
| | | 71 |
| VAH_b | Phase B VAH | 72 |
| | | 73 |
| | | 74 |
| | | 75 |
| V_c | Phase C VRMS | 79 |
| | | 80 |
| | | 81 |
| | | 82 |
| I_c | Phase C IRMS | 83 |
| | | 84 |
| | | 85 |
| | | 86 |
| kW_c | Phase C kWatt | 87 |
| | | 88 |
| | | 89 |
| | | 90 |
| kVAR_c | Phase C VAR | 91 |
| | | 92 |
| | | 93 |
| | | 94 |
| kA_c | Phase C kA | 95 |
| | | 96 |
| | | 97 |


Copyright © ICP DAS Co., Ltd. All Rights Reserved. www.icpdas.com ✉ E-mail: service@icpdas.com

| | | |
|---|---|---|
| | | 98 |
| PF_c | Phase C PF | 99 |
| | | 100 |
| | | 101 |
| | | 102 |
| WH_c | Phase C WH | 103 |
| | | 104 |
| | | 105 |
| | | 106 |
| VARH_c | Phase C VARH | 107 |
| | | 108 |
| | | 109 |
| | | 110 |
| VAH_c | Phase C VAH | 111 |
| | | 112 |
| | | 113 |
| | | 114 |

| | | |
|---|---|---|
| VTHD | Voltage total harmonic distortion | 119 |
| | | 120 |
| | | 121 |
| | | 122 |
| ITHD | current total harmonic distortion | 123 |
| | | 124 |
| | | 125 |
| | | 126 |
| BiPosWH | Bipolar positive WH | 127 |
| | | 128 |
| | | 129 |
| | | 130 |
| BiNegWH | Bipolar negative WH | 131 |
| | | 132 |
| | | 133 |
| | | 134 |
| BiTotWH | Bipolar total WH | 135 |
| | | 136 |


Copyright © ICP DAS Co., Ltd. All Rights Reserved. www.icpdas.com ✉ E-mail: service@icpdas.com

| | | |
|---|---|---|
| | | 137 |
| | | 138 |
| Reserved | Reserved | 139~145 |

**The EherNet/IP output data frame:**

| Float format | | |
|---|---|---|
| **Item** | Description | Byte index |
| **DO0** | Relay 0<br>0 = OFF<br>1 = ON | 1 |
| **DO1** | Relay 1<br>0 = OFF<br>1 = ON | 2 |
| **Reserved** | Reserved | 3 |
| **Reserved** | Reserved | 4 |
| **Reserved** | Reserved | 5 |
| **Reserved** | Reserved | 6 |


Copyright © ICP DAS Co., Ltd. All Rights Reserved. www.icpdas.com ✉ E-mail: service@icpdas.com

## 8.3. Connecting the Power and Host PC

### 8.3.1. Without PoE(Power over Ethernet)

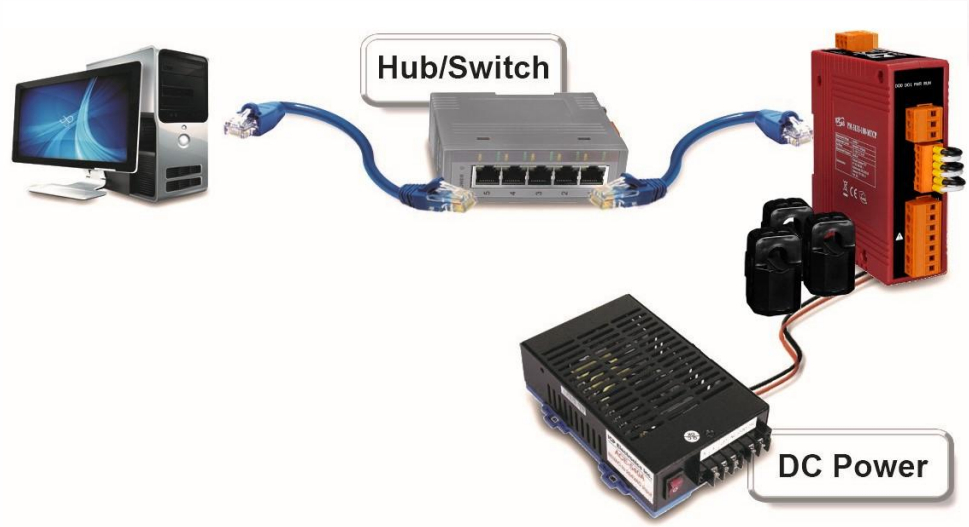


### 8.3.2. With PoE(Power over Ethernet ):

The PM-3133-EIP module can be powered using a PoE switch that complies with the IEEE802.3af standard. This allows both data and power to be transmitted over a single Ethernet cable, eliminating the need for separate power wiring and simplifying installation.





Copyright © ICP DAS Co., Ltd. All Rights Reserved. www.icpdas.com ✉ E-mail: service@icpdas.com

# 9. CANopen Communication

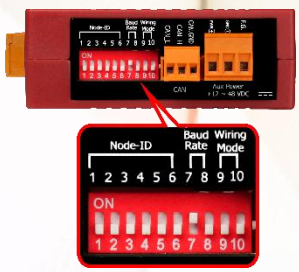


## 9.1. CANopen Settings

- Default setting for CANopen: **Baud rate:125 K b.p.s.**, **Node ID:1**
- DIP switch (SW1-SW6): Used for setting the Node ID, with the default set to 1(all switches OFF)
  **For example:** to set the Node ID to 10，configure the DIP switches as follows: SW1 = ON, SW2 = OFF, SW3 = OFF, SW4 = ON, SW5 = OFF, SW6 = OFF.

- SW1－SW6 Settings
  The DIP switches **SW1–SW6** are used to configure the **CANopen Node ID** for communication. The Node ID can be set to any value between **1 and 64**. The table below shows how to configure the DIP switches for each Node ID:

| Node ID | SW 1 | SW 2 | SW 3 | SW 4 | SW 5 | SW 6 |
|---|---|---|---|---|---|---|
| 1 | OFF | OFF | OFF | OFF | OFF | OFF |
| 2 | **ON** | OFF | OFF | OFF | OFF | OFF |
| 3 | OFF | **ON** | OFF | OFF | OFF | OFF |
| 4 | **ON** | **ON** | OFF | OFF | OFF | OFF |
| 5 | OFF | OFF | **ON** | OFF | OFF | OFF |
| 6 | **ON** | OFF | **ON** | OFF | OFF | OFF |
| 7 | OFF | **ON** | **ON** | OFF | OFF | OFF |
| 8 | **ON** | **ON** | **ON** | OFF | OFF | OFF |
| 9 | OFF | OFF | OFF | **ON** | OFF | OFF |
| 10 | **ON** | OFF | OFF | **ON** | OFF | OFF |
| 11 | OFF | **ON** | OFF | **ON** | OFF | OFF |
| 12 | **ON** | **ON** | OFF | **ON** | OFF | OFF |
| 13 | OFF | OFF | **ON** | **ON** | OFF | OFF |
| 14 | **ON** | OFF | **ON** | **ON** | OFF | OFF |
| 15 | OFF | **ON** | **ON** | **ON** | OFF | OFF |
| 16 | **ON** | **ON** | **ON** | **ON** | OFF | OFF |
| 17 | OFF | OFF | OFF | OFF | **ON** | OFF |
| 18 | **ON** | OFF | OFF | OFF | **ON** | OFF |
| 19 | OFF | **ON** | OFF | OFF | **ON** | OFF |
| 20 | **ON** | **ON** | OFF | OFF | **ON** | OFF |
| 21 | OFF | OFF | **ON** | OFF | **ON** | OFF |
| 22 | **ON** | OFF | **ON** | OFF | **ON** | OFF |
| 23 | OFF | **ON** | **ON** | OFF | **ON** | OFF |
| 24 | **ON** | **ON** | **ON** | OFF | **ON** | OFF |
| 25 | OFF | OFF | OFF | **ON** | **ON** | OFF |
| 26 | **ON** | OFF | OFF | **ON** | **ON** | OFF |


Copyright © ICP DAS Co., Ltd. All Rights Reserved. www.icpdas.com ✉ E-mail: service@icpdas.com

| | | | | | | |
|---|---|---|---|---|---|---|
| 27 | OFF | **ON** | OFF | **ON** | **ON** | OFF |
| 28 | **ON** | **ON** | OFF | **ON** | **ON** | OFF |
| 29 | OFF | OFF | **ON** | **ON** | **ON** | OFF |
| 30 | **ON** | OFF | **ON** | **ON** | **ON** | OFF |
| 31 | OFF | **ON** | **ON** | **ON** | **ON** | OFF |
| 32 | **ON** | **ON** | **ON** | **ON** | **ON** | OFF |
| 33 | OFF | OFF | OFF | OFF | OFF | **ON** |
| 34 | **ON** | OFF | OFF | OFF | OFF | **ON** |
| 35 | OFF | **ON** | OFF | OFF | OFF | **ON** |
| 36 | **ON** | **ON** | OFF | OFF | OFF | **ON** |
| 37 | OFF | OFF | **ON** | OFF | OFF | **ON** |
| 38 | **ON** | OFF | **ON** | OFF | OFF | **ON** |
| 39 | OFF | **ON** | **ON** | OFF | OFF | **ON** |
| 40 | **ON** | **ON** | **ON** | OFF | OFF | **ON** |
| 41 | OFF | OFF | OFF | **ON** | OFF | **ON** |
| 42 | **ON** | OFF | OFF | **ON** | OFF | **ON** |
| 43 | OFF | **ON** | OFF | **ON** | OFF | **ON** |
| 44 | **ON** | **ON** | OFF | **ON** | OFF | **ON** |
| 45 | OFF | OFF | **ON** | **ON** | OFF | **ON** |
| 46 | **ON** | OFF | **ON** | **ON** | OFF | **ON** |
| 47 | OFF | **ON** | **ON** | **ON** | OFF | **ON** |
| 48 | **ON** | **ON** | **ON** | **ON** | OFF | **ON** |
| 49 | OFF | OFF | OFF | OFF | **ON** | **ON** |
| 50 | **ON** | OFF | OFF | OFF | **ON** | **ON** |
| 51 | OFF | **ON** | OFF | OFF | **ON** | **ON** |
| 52 | **ON** | **ON** | OFF | OFF | **ON** | **ON** |
| 53 | OFF | OFF | **ON** | OFF | **ON** | **ON** |
| 54 | **ON** | OFF | **ON** | OFF | **ON** | **ON** |
| 55 | OFF | **ON** | **ON** | OFF | **ON** | **ON** |
| 56 | **ON** | **ON** | **ON** | OFF | **ON** | **ON** |
| 57 | OFF | OFF | OFF | **ON** | **ON** | **ON** |
| 58 | **ON** | OFF | OFF | **ON** | **ON** | **ON** |
| 59 | OFF | **ON** | OFF | **ON** | **ON** | **ON** |
| 60 | **ON** | **ON** | OFF | **ON** | **ON** | **ON** |
| 61 | OFF | OFF | **ON** | **ON** | **ON** | **ON** |
| 62 | **ON** | OFF | **ON** | **ON** | **ON** | **ON** |
| 63 | OFF | **ON** | **ON** | **ON** | **ON** | **ON** |
| 64 | **ON** | **ON** | **ON** | **ON** | **ON** | **ON** |


Copyright © ICP DAS Co., Ltd. All Rights Reserved. www.icpdas.com ✉ E-mail: service@icpdas.com

- SW7－SW8 Settings

PM-3133: For CANopen Baud Rate Setting

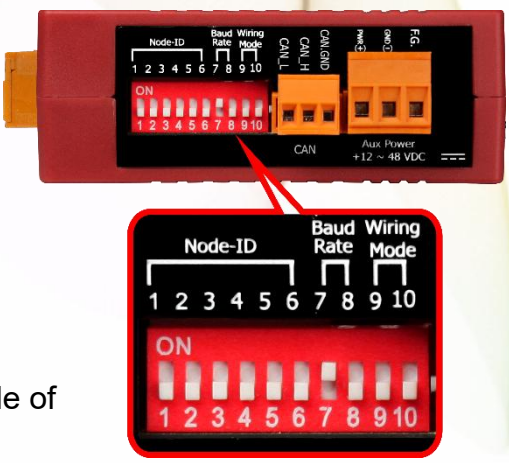


| Baud Rate | SW 7 | SW8 |
|---|---|---|
| 125 K bps(Default) | OFF | OFF |
| 250 K bps | **ON** | OFF |
| 500 K bps | OFF | **ON** |
| 1M bps | **ON** | **ON** |

- SW9 - SW10 Settings

SW9 and SW10 are used to configure the wiring mode of the PM-3133 series.

| Wiring | SW 9 | SW 10 |
|---|---|---|
| Software Setting | OFF | OFF |
| 3P3W-2CT | **ON** | OFF |
| 3P3W-3CT | OFF | **ON** |
| 3P4W-3CT | **ON** | **ON** |

**Note**: For detailed wiring mode configurations and wiring diagrams, refer to Section 4.2, "Wiring."


Copyright © ICP DAS Co., Ltd. All Rights Reserved. www.icpdas.com ✉ E-mail: service@icpdas.com

# 9.2. CANopen Protocol

CANopen is a network protocol derived from the CAN bus, initially used in automotive control systems. Today, it has been widely adopted in various applications, such as vehicles, industrial machinery, building automation, medical devices, maritime systems, restaurant appliances, laboratory equipment and research applications.

## 9.2.1. SDO Introduction

As one of the core protocols in CANopen, the Service Data Object (SDO) protocol facilitates access to a device's Object Dictionary, allowing for the reading and writing of configuration parameters as well as the exchange of non-real-time data. This protocol plays a critical role in device configuration and diagnostics, serving as the foundation for the detailed communication methods outlined in the subsequent sections. The following sections will provide an in-depth explanation of the specific communication mechanisms of the SDO protocol, including its upload and download processes, as well as the handling of exceptional scenarios such as interrupted transmissions.

### 9.2.1.1. Upload SDO Protocol

**Initiate SDO Upload Protocol**

Before performing SDO segment transfers, the client and server must establish communication through the **Initiate SDO Upload Protocol**. This protocol allows the SDO client to specify the object to be uploaded to the server and simultaneously transfer up to 4 bytes of data.

- If the data length is less than or equal to 4 bytes:
  The upload is completed using only the Initiate SDO Upload Protocol.
- If the data length is greater than 4 bytes:
  The Upload SDO Segment Protocol is required to transfer the data in smaller parts.


Copyright © ICP DAS Co., Ltd. All Rights Reserved. www.icpdas.com ✉ E-mail: service@icpdas.com

The communication process of this protocol is shown as follows.

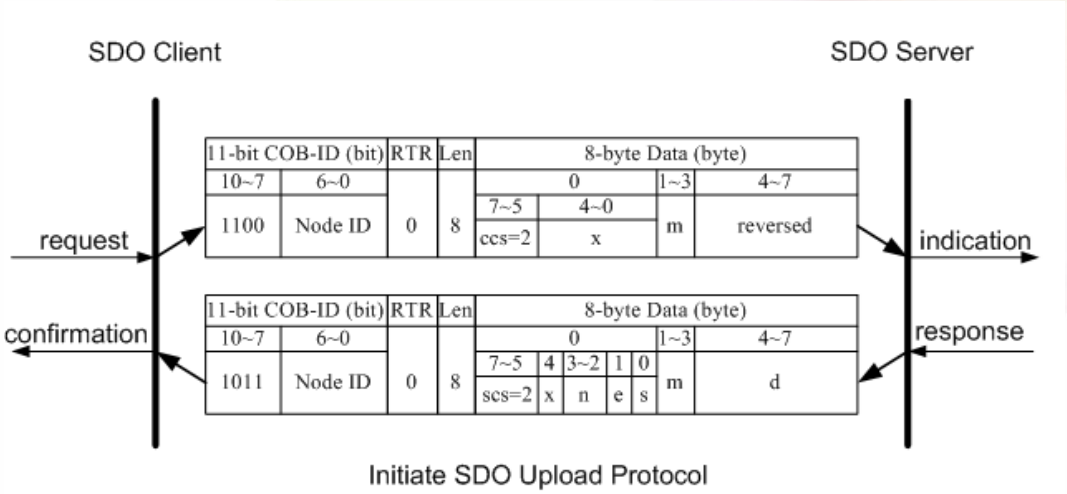


Initiate SDO Upload Protocol

**ccs**: client command specifier

2: initiate upload request

**scs**: server command specifier

2: initiate upload response

**n**: Only valid if **e** = 1 and **s** = 1, otherwise 0.

If this field is valid, **n** represents the number of Bytes in the **d** field that are not used to store segment data. Specifically, the Bytes in the range [8-n, 7] of the d field are unused and do not contain any valid data.

**e**: transfer type

0: normal transfer

1: expedited transfer

If **e=1**, it indicates that the data size is less than or equal to 4 bytes. In this case, the transmission can be completed using only the Initiate SDO Upload Protocol.

If **e=0**, the Upload SDO Segment Protocol is required to complete the transmission.

**s**: size indicator

0: Data set size is not indicated.

1: Data set size is indicated.

**m**: multiplexer

It represents the index/sub-index of the data to be transferred by the SDO. The first two bytes are the index value and the last byte is the sub-index value.

**d**: data

- When **e**=0, **s**=0: **d** is reserved for further use.
- When **e**=0, **s**=1: **d** contains the number of bytes to be uploaded. Byte 4 contains the Least Significant Bit(LSB), and byte 7 contains the Most Significant Bit(MSB).


Copyright © ICP DAS Co., Ltd. All Rights Reserved. www.icpdas.com ✉ E-mail: service@icpdas.com

- When **e**=1, **s**=1: **d** contains the data to be uploaded, with a length of 4-**n** bytes. The encoding depends on the type of the data referenced by the index and sub-index.
- When **e**=1, **s**=0: **d** contains an unspecified number of bytes to be uploaded.

**x**: Not used, always 0

**reserved**: Reserved for further use, always 0


Copyright © ICP DAS Co., Ltd. All Rights Reserved. www.icpdas.com ✉ E-mail: service@icpdas.com

**Upload SDO Segment Protocol**

After completing the **Initiate SDO Upload Protocol**, if the length of the data to be uploaded exceeds 4 bytes, the client will begin transmitting the data in segments and proceed to the **Upload SDO Segment Protocol** stage. The process follows these steps:

1. The client first sends an **Initiate Upload Request**, specifying the data object to be uploaded.
2. The server responds with an **Initiate Upload Response**, confirming that segment transfer will proceed and providing the relevant parameters.
3. The client starts transmitting data in segments based on the parameters provided by the server.
4. During each transfer, the client must check the **Toggle Bit** and the **Segment Completion Indicator (c)** to ensure correctness.

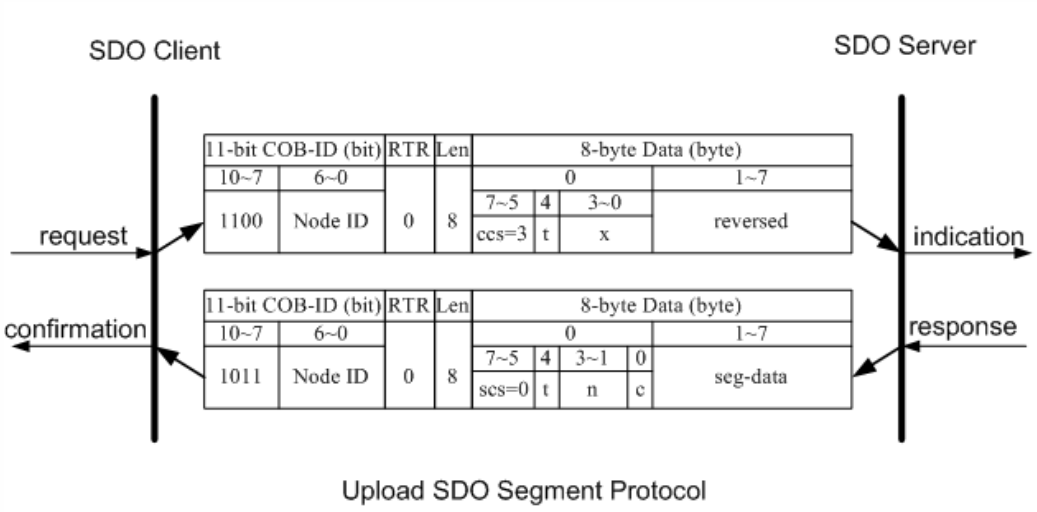


Upload SDO Segment Protocol

**ccs**: client command specifier

3: upload segment request

**scs**: server command specifier

0: upload segment response

**t**: toggle bit.

- The initial value is 0 and alternates between 0 and 1 with each new segment transfer..
- The toggle bit in the client's request and the server's response must match to ensure the segment sequence is correct.

**c** : indicates whether where are still more segments to be uploaded

0: more segments to be uploaded.

1: no more segment to be uploaded.


Copyright © ICP DAS Co., Ltd. All Rights Reserved. www.icpdas.com ✉ E-mail: service@icpdas.com

**seg-data**: Contains up to 7 bytes of segment data. The encoding depends on the type data referenced by index and sub-index.

**n**: Indicates the number of bytes in **seg-data** that do not contain segment data.

Bytes [8-**n**, 7] do not contain segment data.

**n** = 0 if no segment size is indicated.

**x**: Not used, always 0

**reserved**: Reserved for further use, always 0



Copyright © ICP DAS Co., Ltd. All Rights Reserved. www.icpdas.com ✉ E-mail: service@icpdas.com

## 9.2.1.2. Download SDO Protocol

**Initiate SDO Download Protocol**

The download process is similar to the upload process, but differs slightly in the parameters used in the SDO messages. It consists of two steps.

- If the data length is less than or equal to 4 bytes:
  The download is completed using only the Initiate SDO Download Protocol.
- If the data length is greater than 4 bytes:
  The Download SDO Segment Protocol is required to transfer the data in smaller parts.

The details of the initiate SDO download protocol are as follows:

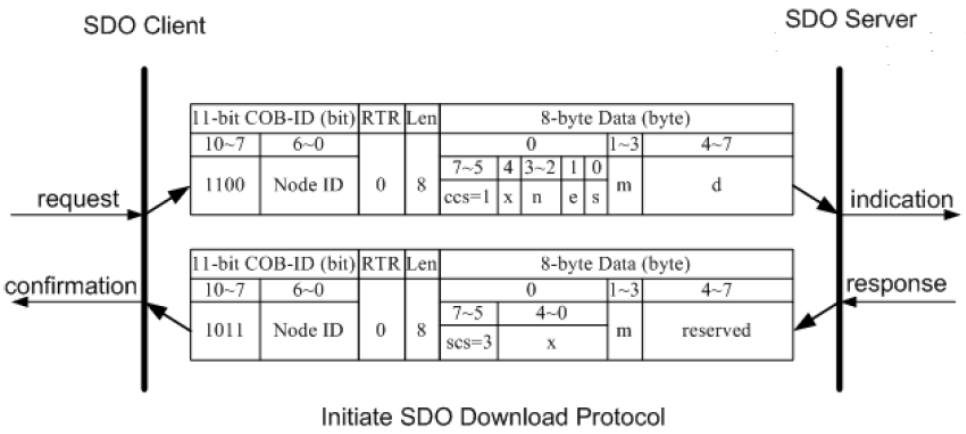


Initiate SDO Download Protocol

**ccs**: client command specifier

1: initiate download request

**scs**: server command specifier

3: initiate download response

**n**: Only valid if e = 1 and s = 1, otherwise 0.

If this field is valid, **n** represents the number of Bytes in the **d** field that are not used to store segment data. Specifically, the Bytes in the range [8-n, 7] of the d field are unused and do not contain any valid data.

**e**: transfer type

0: normal transfer

1: expedited transfer

If **e=1**, it indicates that the data size is less than or equal to 4 bytes. In this case,


Copyright © ICP DAS Co., Ltd. All Rights Reserved. www.icpdas.com ✉ E-mail: service@icpdas.com

the transmission can be completed using only the Initiate SDO Download Protocol. If **e=0**, the Download SDO Segment Protocol is required to complete the transmission.

**s**: size indicator

0: Data set size not indicated.

1: Data set size indicated.

**m**: multiplexer

It represents the index/sub-index of the data to be transferred by the SDO. The first two bytes are the index value and the last byte is the sub-index value.

**d**: data

- When **e**=0, **s**=0: **d** is reserved for further use.
- When **e**=0, **s**=1: **d** contains the number of bytes to be downloaded. Byte 4 contains the Least Significant Bit(LSB), and byte 7 contains the Most Significant Bit(MSB).
- When **e**=1, **s**=1: **d** contains the data to be downloaded, with a length of 4-**n** bytes. The encoding depends on the type of the data referenced by the index and sub-index.
- When **e**=1, **s**=0: **d** contains an unspecified number of bytes to be downloaded.

**x**: Not used, always 0

**reserved**: Reserved for further use, always 0


Copyright © ICP DAS Co., Ltd. All Rights Reserved. www.icpdas.com ✉ E-mail: service@icpdas.com

**Download SDO Segment Protocol**

After completing the Initiate SDO Download Protocol, if the length of the data to be downloaded exceeds 4 bytes, the client will begin receiving the data in segments and proceed to the **Download SDO Segment Protocol** stage. The process follows these steps:

1. The client first sends a **Download Segment Request**, specifying the segment of data to be downloaded.
2. The server responds with a **Download Segment Response**, providing the segment data to be downloaded.
3. The client continues receiving data in segments based on the responses from the server.
4. During each transfer, the client must check the **Toggle Bit** and the **More Segments Indicator (c)** to ensure data integrity and proper sequence.

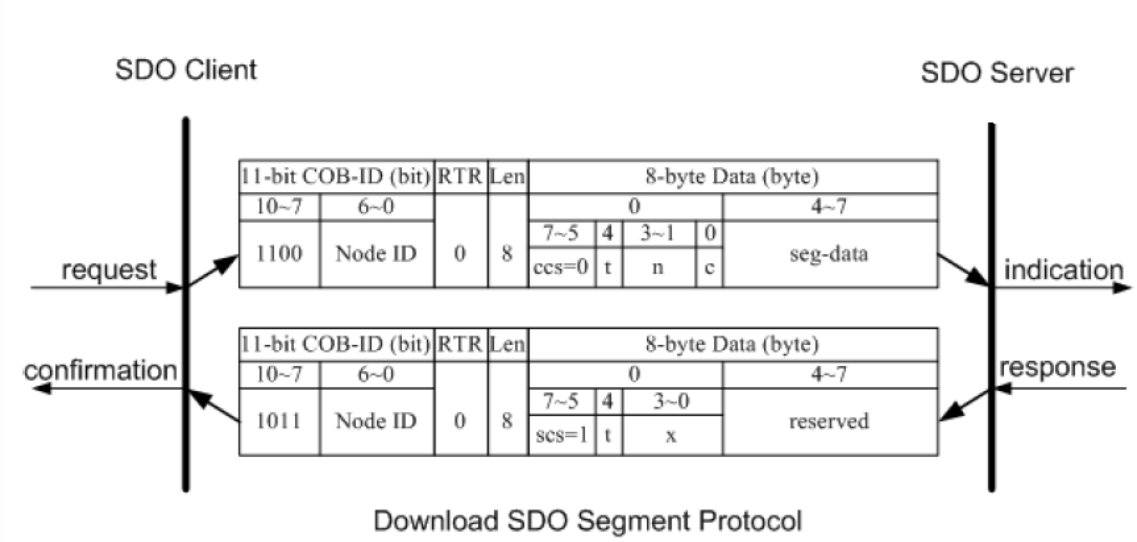


Download SDO Segment Protocol

**ccs**: client command specifier

0: download segment request

**scs**: server command specifier

1: download segment response

**seg-data**: Contains up to 7 bytes of segment data to be downloaded.

The encoding of the segment depends on the type, identified by index and sub-index.

**n**: Indicates the number of bytes in **seg-data** that do not contain segment data.

Bytes [8-n, 7] do not contain segment data.

n = 0 if the segment size is not indicated.

**c**: indicates whether where are still more segments to be uploaded



Copyright © ICP DAS Co., Ltd. All Rights Reserved. www.icpdas.com ✉ E-mail: service@icpdas.com

0: more segments to be uploaded.

1: no more segment to be uploaded.

**t**: toggle bit

- The initial value is 0 and alternates between 0 and 1 with each new segment transfer.
- The toggle bit in the client's request and the server's response must match to ensure the segment sequence is correct.

**x**: Not used, always 0

**reserved**: Reserved for further use, always 0


Copyright © ICP DAS Co., Ltd. All Rights Reserved. www.icpdas.com ✉ E-mail: service@icpdas.com

### 9.2.1.3. Abort SDO Transfer Protocol

In certain conditions, the SDO client or SDO server may need to terminate the SDO transmission. This can happen, for example, if the requested object entry does not exist, is read-only, or if the transmission needs to be stopped due to special circumstances. When such condition arises, either the client or the server can initiate an Abort SDO Transfer message to halt the communication.
The structure of the Abort SDO Transfer protocol is outlined below.

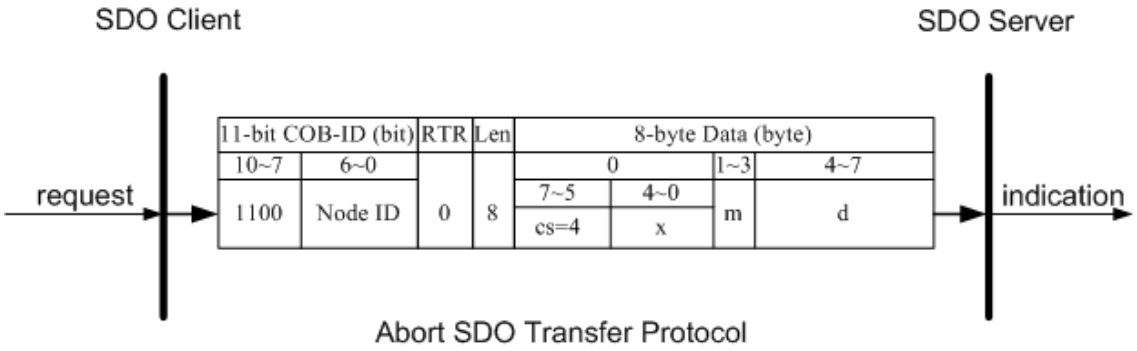


Abort SDO Transfer Protocol

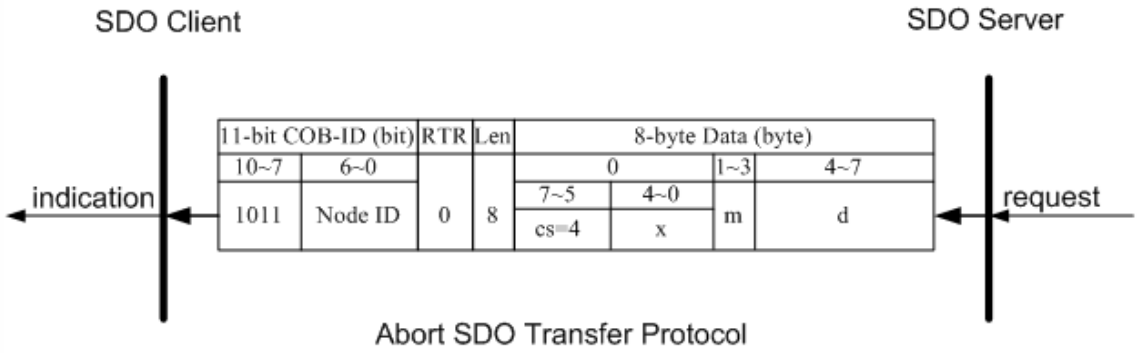


Abort SDO Transfer Protocol

**cs**: command specifier
4: Indicates an Abort Transfer Request
**x**: Not used, always 0
**m**: multiplexer
Represents the index/sub-index of the data to be transfer by the SDO.
The first two bytes are the index value and the last byte is the sub-index value.
**d**: Contains a 4-byte “Abort Code” specifying the reason for the termination.


Copyright © ICP DAS Co., Ltd. All Rights Reserved. www.icpdas.com ✉ E-mail: service@icpdas.com

| Abort Code | Description |
|---|---|
| 0503 0000h | Toggle bit not alternated. |
| 0504 0000h | SDO protocol timed out. |
| 0504 0001h | Invalid or unknown client/server command specified. |
| 0504 0002h | Invalid block size (block mode only). |
| 0504 0003h | Invalid sequence number (block mode only). |
| 0504 0004h | CRC error (block mode only). |
| 0504 0005h | Out of memory. |
| 0601 0000h | Unsupported access to the object. |
| 0601 0001h | Attempt to read a write-only object. |
| 0601 0002h | Attempt to write a read-only object. |
| 0602 0000h | Object does not exist in the object dictionary. |
| 0604 0041h | Object cannot be mapped to the PDO. |
| 0604 0042h | The number or size of the objects mapped exceeds the allowed PDO length. |
| 0604 0043h | General parameter incompatibility reason. |
| 0604 0047h | General internal incompatibility in the device. |
| 0606 0000h | Access failed due to hardware error. |
| 0607 0010h | Data type or service parameter length mismatch. |
| 0607 0012h | Data type does not match, service parameter length too high. |
| 0607 0013h | Data type does not match, service parameter length too low. |
| 0609 0011h | Sub-index does not exist. |
| 0609 0030h | Parameter value exceeds allowed range (only for write access). |
| 0609 0031h | Value of parameter written too high. |
| 0609 0032h | Value of parameter written too low. |
| 0609 0036h | Maximum value is less than minimum value. |
| 0800 0000h | General error. |
| 0800 0020h | Data cannot be transferred or stored to the application. |
| 0800 0021h | Data cannot be transferred or stored to the application due to local control. |
| 0800 0022h | Data cannot be transferred or stored to the application due to the present device state. |
| 0800 0023h | Object dictionary dynamic generation fails or no object dictionary is present(e.g. object dictionary is generated from file and generation fails because of a file error). |


Copyright © ICP DAS Co., Ltd. All Rights Reserved. www.icpdas.com ✉ E-mail: service@icpdas.com

## 9.2.2. PDO Introduction

In CANopen, PDOs (Process Data Objects) enable fast, real-time data exchange between devices without requiring acknowledgment. Each PDO can transmit multiple data entries, such as measurements or status updates, and uses mapping from the object dictionary to organize data transmission efficiently.

### 9.2.2.1. PDO COB-ID Parameters

Before transmitting real-time data through the PDO, it is essential to verify the COB-ID (Communication Object Identifier) parameter in the corresponding PDO communication object. The COB-ID is a 32 bit value that defines the priority, type, and behavior of the PDO. Each bit in the CPB-ID serves a specific function, as described in the following table:

| Bit Number | Value | Meaning |
|---|---|---|
| 31(MSB) | 0 | PDO exits (PDO is valid) |
| | 1 | PDO does not exist (PDO is not valid) |
| 30 | 0 | RTR(Remote Transmission Request) allowed on this PDO |
| | 1 | No RTR allowed on this PDO |
| 29 | 0 | 11-bit ID (CAN 2.0A) |
| | 1 | 29-bit ID (CAN 2.0B) |
| 28-11 | 0 | If bit 29=0 |
| | X | If bit 29=1: 28-11 bits of 29-bit COB-ID |
| 10-0(LSB) | X | 10-0 bits of COB-ID |

Note: PM-3133-CPS only supports CAN 2.0A (11-bit ID).


Copyright © ICP DAS Co., Ltd. All Rights Reserved. www.icpdas.com ✉ E-mail: service@icpdas.com

Default PDO COB-ID parameters:

| Number of PDO | Default COB-ID | |
|---|---|---|
| | Bit10 to Bit7 (Function Code) | Bit6 to Bit0 |
| TxPDO1 | 0011 | Node-ID |
| TxPDO2 | 0101 | Node-ID |
| TxPDO3 | 0111 | Node-ID |
| TxPDO4 | 1001 | Node-ID |
| RxPDO1 | 0100 | Node-ID |
| RxPDO2 | 0110 | Node-ID |
| RxPDO3 | 1000 | Node-ID |
| RxPDO4 | 1010 | Node-ID |

Note:

1. Some COB-IDs are reserved for specific communication objects or other designated purposes and therefore cannot be used by users. Apart from these reserved COB-IDs, users may customize the remaining COB-IDs as PDO COB-IDs; however, they must ensure that no duplicate COB-IDs are assigned within the same node.
   The table below lists the reserved COB-IDs:

| Reserved COB-ID (Hex) | Assigned Object |
|---|---|
| 0 | Network Management (NMT) |
| 1 | Reserved |
| 80 | Synchronization (SYNC) |
| 81 to FF | Emergency Event (EMERGENCY) |
| 100 | Time Stamp (TIME STAMP) |
| 101 to 180 | Reserved |
| 581 to 5FF | Default for SDO Transmission |
| 601 to 67F | Default for SDO Reception |
| 6E0 | Reserved |
| 701 to 77F | Network Management (NMT) Error Control |
| 780 to 7FF | Reserved |

2. PDO COB-ID parameters cannot be changed if the PDO is valid (bit 31 =0).


Copyright © ICP DAS Co., Ltd. All Rights Reserved. www.icpdas.com ✉ E-mail: service@icpdas.com

### 9.2.2.2. Transmission Type

The transmission type is a key parameter defined in PDO communication objects (sub-index 02). Each PDO has a specific transmission type that determines how the data is sent or received. It defines the behavior of the PDO, such as whether it is synchronous, asynchronous, or event-driven.
The table below describes the relationship between the transmission type value and the behavior of the PDO. For example, if transmission type 0 is set for the first TxPDO, the CANopen device will follow acyclic and synchronous PDO transmission rules.

| Transmission Type | PDO Transmission Method | | | | |
|---|---|---|---|---|---|
| | Cyclic | Acyclic | Synchronous | Asynchronous | RTR only |
| 0 | | O | O | | |
| 1-240 | O | | O | | |
| 241-251 | ----------Reserved---------- | | | | |
| 252 | | | O | | O |
| 253 | | | | O | O |
| 254 | | | | O | |
| 255 | | | | O | |

Note:

- **Transmission type 1-240**: Indicates how many SYNC objects trigger a TxPDO. RxPDO always respond to the next SYNC, regardless of the transmission type.

- **Transmission type 252 and 253:** These are used exclusively for TxPDO.
  - Type 252 updates data immediately upon receiving a SYNC signal but does not transmit the data.
  - Type 253 does not update data based on the SYNC signal and only transmits data upon receiving a Remote Transmission Request (RTR).
  - For both types, the PDO transmits data only when an RTR request is received.


Copyright © ICP DAS Co., Ltd. All Rights Reserved. www.icpdas.com ✉ E-mail: service@icpdas.com

- **Transmission types 254 and 255**:
  - The device can use an event timer to periodically trigger the transmission of TxPDO.
  - Additionally, if a DI or other variable is mapped to a PDO, any changes in the value of this DI will immediately trigger the transmission of the corresponding TxPDO.
  - For transmission type 255, in addition to the above triggering conditions, data transmission can also be initiated by a Remote Transmission Request (RTR).
- The PM-3133-CPS doesn't support RxPDO.


Copyright © ICP DAS Co., Ltd. All Rights Reserved. www.icpdas.com ✉ E-mail: service@icpdas.com

### 9.2.2.3. PDO Communication Rule

PDO-related objects are assigned indexes within the range 0x1400 to 0x1BFF. However, for the PM-3133-CPS, RxPDO communication objects are not used. The indexes for TxPDO communication objects range from 0x1800 to 0x1813, while their corresponding mapping objects are indexed from 0x1A00 to 0x1A13. Each TxPDO communication object has a corresponding PDO mapping object.

For example,

- The first TxPDO communication object is stored at **index 0x1800**, with its corresponding mapping object at **index 0x1A00**.
- Similarly, the second TxPDO communication object is stored at **0x1801**, and its mapping object at **0x1A01**, and so on.

Before accessing real-time data via PDO communication, users must ensure that all parameters for both the PDO communication objects and their mapping objects are correctly configured. Additionally, after modifying any parameters, the device must be set to the NMT Operational state to activate the new configuration.

Operational Requirements:

- PDO communication is only available when the device is in the NMT operational state.
- Users can use the NMT module control protocol (explained in section 9.2.3) to change the NMT state of the PM-3133-CPS.

Data Length Matching:

During PDO communication, the data length (L) of the PDO message must exactly match the total size (n) of the corresponding PDO mapping object.

- If L > n: Only the first n bytes of the PDO message will be processed by the PDO consumer.
- If L < n: The PDO message will be discarded, and an Emergency message(EMCY) with error code 8210h will be sent to the PDO producer.

.


Copyright © ICP DAS Co., Ltd. All Rights Reserved. www.icpdas.com ✉ E-mail: service@icpdas.com

The PDO communication set is shown as follows.

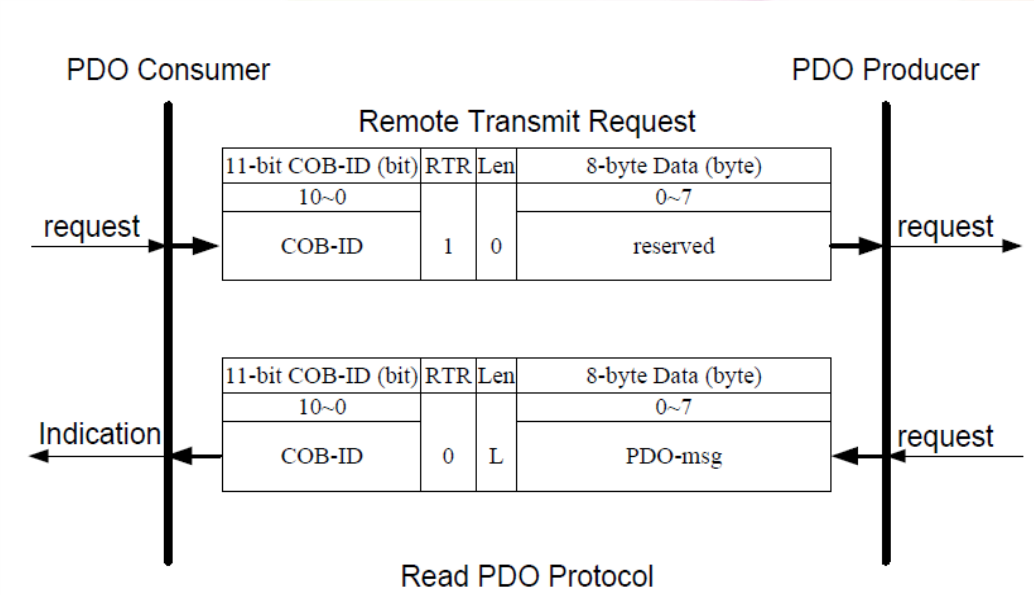


**COB-ID**: The default PDO COB-ID, or user-defined COB-ID.

**L**: The length of the PDO message (in bytes)

**PDO-msg**: Real-time data or data that can be mapped into PDO mapping objects


Copyright © ICP DAS Co., Ltd. All Rights Reserved. www.icpdas.com ✉ E-mail: service@icpdas.com

## 9.2.3. NMT Introduction

The NMT (Network Management) protocol is used to control the state of CANopen devices. The PM-3133-CPS supports several NMT commands that allow changing the NMT slave status. Below are the protocols used for switching between different NMT states.

### 9.2.3.1. Module Control Protocol

The following commands are used to control the NMT slave device status:

**Start Remote Node Protocol**

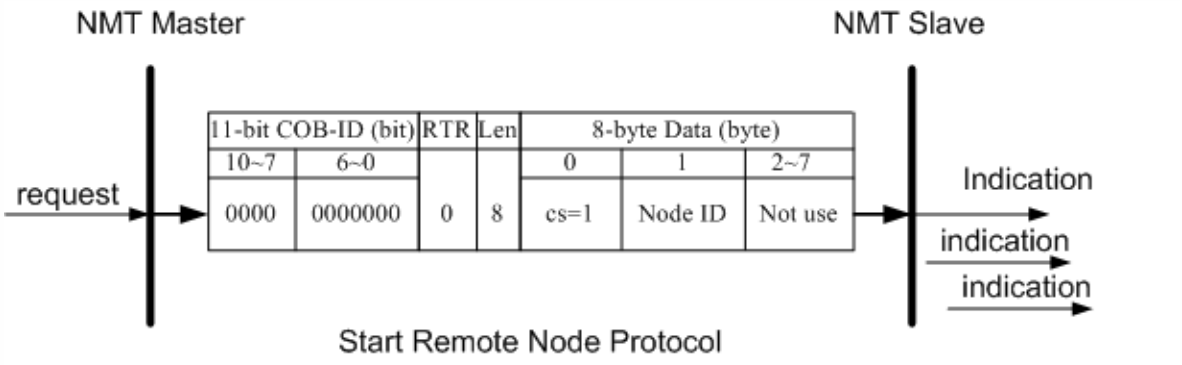


**cs**: NMT command specified

1: start

**Node ID**: the node ID of the NMT slave device


Copyright © ICP DAS Co., Ltd. All Rights Reserved. www.icpdas.com ✉ E-mail: service@icpdas.com

**Stop Remote Node Protocol**

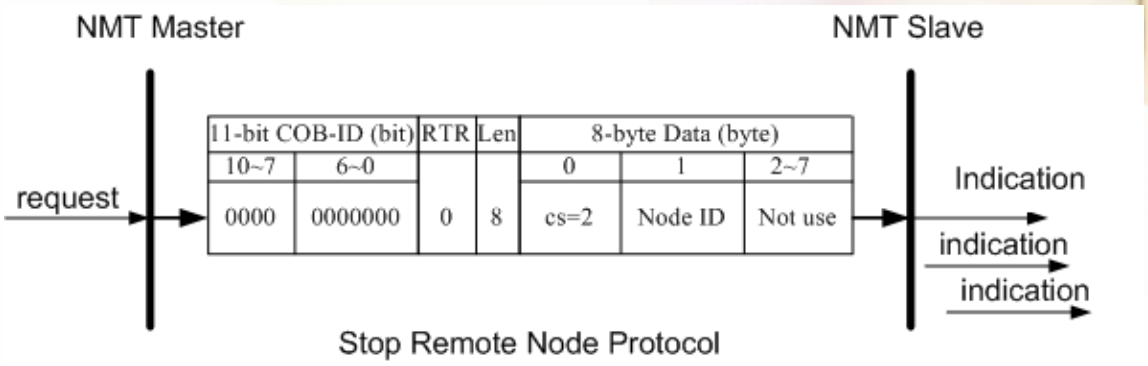


**cs**: NMT command specified

2: stop

**Node ID**: the node ID of the NMT slave device

**Enter Pre-Operational Protocol**

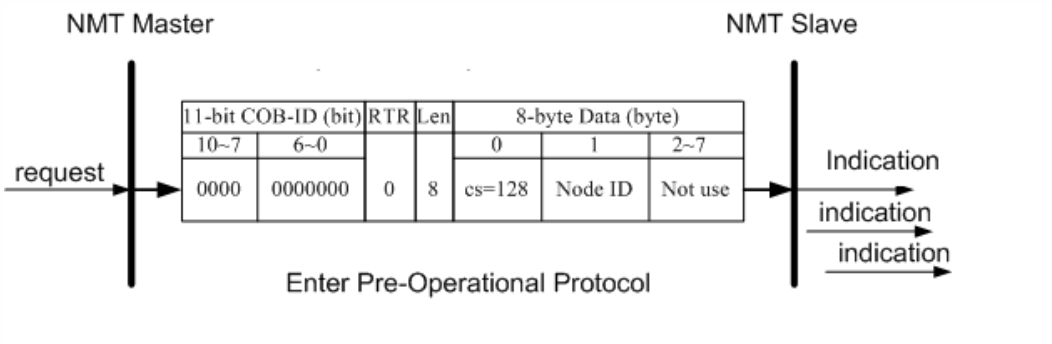


**cs**: NMT command specified

128: enter PRE-OPERATIONAL

**Node ID**: the node ID of the NMT slave device



Copyright © ICP DAS Co., Ltd. All Rights Reserved. www.icpdas.com ✉ E-mail: service@icpdas.com

**Reset Node Protocol**

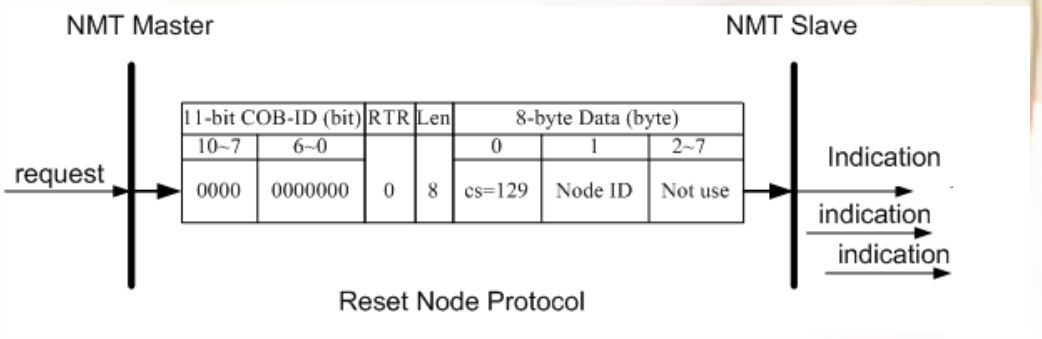


Reset Node Protocol

**cs** : NMT command specified

129: Reset_Node

**Node ID**: the node ID of the NMT slave device

**Reset Communication Protocol**

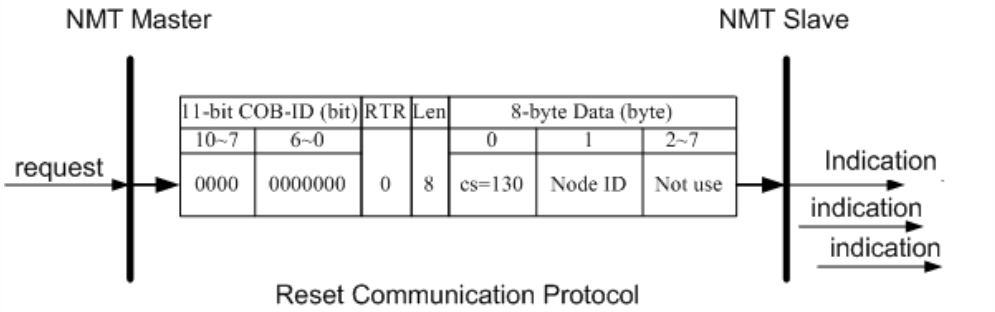


Reset Communication Protocol

**cs**: NMT command specified

130: Reset_Communication

**Node ID**: the node ID of the NMT slave device



Copyright © ICP DAS Co., Ltd. All Rights Reserved. www.icpdas.com ✉ E-mail: service@icpdas.com

## 9.2.3.2. Error Control Protocol

The **Error Control Protocol** ensures that the CANopen device is active and responsive. It uses two key objects:

- **0x100C**: **Guard Time** (the interval between status checks)
- **0x100D**: **Life Time Factor** (a multiplier that extends the waiting period)

The **Node Life Time** defines the maximum amount of time the system will wait for a response from the PM-3133-CPS before considering it unresponsive. It is calculated by multiplying the **Guard Time** by the **Life Time Factor**.
Formula:
Node Life Time = Guard Time × Life Time Factor

When the **PM-3133-CPS** receives the first **RTR (Remote Transmission Request)** — used by the master to verify if the device is active—the **Node Guarding Timer** starts. This timer tracks the time since the last response from the node:

- **If the node responds** within the Node Life Time, the timer resets.
- **If the node does not respond** before the timer expires, the system raises an **error**, indicating the device may be offline or unresponsive.

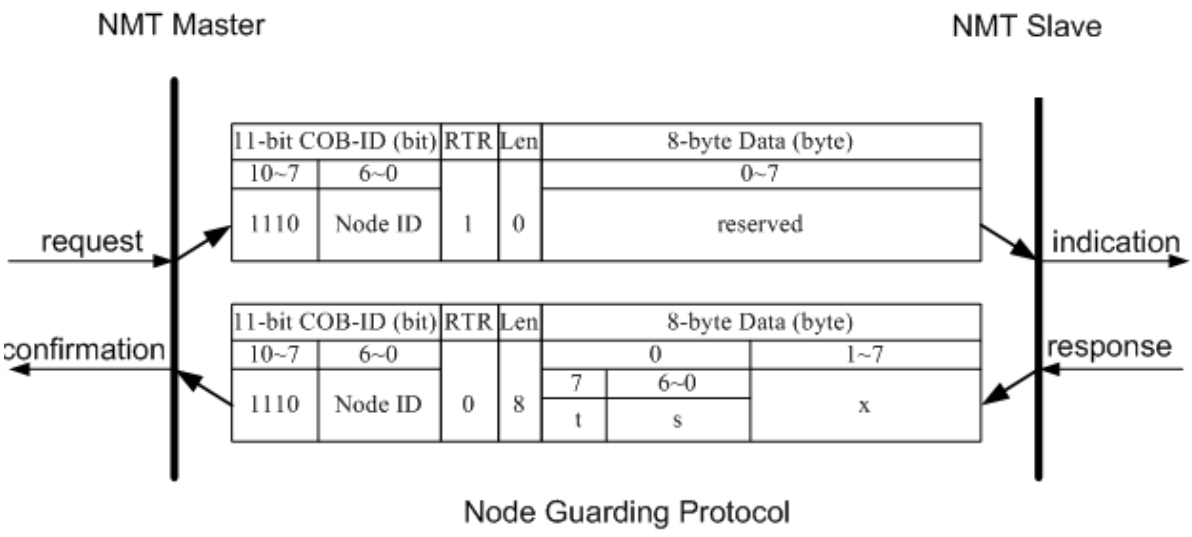


Node Guarding Protocol


Copyright © ICP DAS Co., Ltd. All Rights Reserved. www.icpdas.com ✉ E-mail: service@icpdas.com

**t**: toggle bit

- The toggle bit alternates between 0 and 1 with each consecutive response from the NMT slave.
- When the Node Guarding protocol becomes active, the toggle bit in the first response will be set to 0.

**s**: the state of the NMT Slave

4: STOPPED

5: OPERATIONAL

127: PRE_OPERATIONAL


Copyright © ICP DAS Co., Ltd. All Rights Reserved. www.icpdas.com ✉ E-mail: service@icpdas.com

## 9.2.4. Special Functions for PM-3133-CPS

The PM-3133-CPS module offers a range of specialized functions tailored for power monitoring applications. These include data storage entries in the Manufacturer Specific Profile Area, which provide access to key power meter data. This data is mapped to PDOs (Process Data Objects) for efficient communication within CANopen networks. The following sections outline the structure and mapping details of these entries.

### 9.2.4.1. Power Meter Data Table

The **PM-3133-CPS** defines several entries in the Manufacturer Specific Profile Area that are used to store power meter data. These entries, indexed from **0x3200 to 0x3209**, are mapped to **PDOs** (Process Data Objects) as shown in the table below. Each PDO message consists of **8 bytes** divided between **D0 to D7**, representing fields for CANopen messages from **Data0 to Data7**.

| No.(PDO) | COB-ID | Data Length | D0 to D3 | D4 to D7 |
|---|---|---|---|---|
| 1 | 0x180+Node-ID | 8 | kW_a | kWh_a |
| 2 | 0x280+Node-ID | 8 | kW_b | kWh_b |
| 3 | 0x380+Node-ID | 8 | kW_c | kWh_c |
| 4 | 0x480+Node-ID | 8 | kW_tot | kWh_tot |
| 5 | --- | 8 | Volt(V_a) | Amp(I_a) |
| 6 | --- | 8 | Volt(V_b) | Amp(I_b) |
| 7 | --- | 8 | Volt(V_c) | Amp(I_c) |
| 8 | --- | 8 | Volt(V_avg) | Amp(I_avg) |
| 9 | --- | 8 | kvar_a | kVA_a |
| 10 | --- | 8 | kvar_b | kVA_b |
| 11 | --- | 8 | kvar_c | kVA_c |
| 12 | --- | 8 | kvar_tot | kVA_tot |
| 13 | --- | 8 | PF_a | kVAh_a |
| 14 | --- | 8 | PF_b | kVAh_b |
| 15 | --- | 8 | PF_c | kVAh_c |
| 16 | --- | 8 | PF_tot | kVAh_tot |
| 17 | --- | 8 | kvarh_a | Freq_a |


Copyright © ICP DAS Co., Ltd. All Rights Reserved. www.icpdas.com ✉ E-mail: service@icpdas.com

| | | | | |
|---|---|---|---|---|
| 18 | --- | 8 | kvarh_b | Freq_b |
| 19 | --- | 8 | kvarh_c | Freq_c |
| 20 | --- | 8 | kvarh_tot | Freq_avg |


Copyright © ICP DAS Co., Ltd. All Rights Reserved. www.icpdas.com ✉ E-mail: service@icpdas.com

# 9.3. Object Dictionary of PM-3133-CPS

The **Object Dictionary** in PM-3133-CPS contains all the communication-related parameters and manufacturer-specific entries. The dictionary follows the CANopen protocol, enabling flexible configuration and communication of the power meter. It is divided into several key areas:

- **Communication Profile Area**: This section defines general communication objects.
- **Manufacturer-Specific Profile Area**: This section includes entries for specific features or measurement data unique to PM-3133-CPS.
- **Storage and Restoration of Objects**: This section manages parameter storage and restoration.

## 9.3.1. Communication Profile Area

The **Communication Profile Area** lists the communication parameters essential for CANopen operations. For easier reference, this section is divided into three tables:

1. **General Communication Entries:** Lists device-related identifiers and communication control parameters.
2. **TxPDO Communication Entries:** Contains information about the transmission PDOs.
3. **TxPDO Mapping Communication Entries:** Lists mapping rules for the PDOs.

The column headers are explained as follows:

- **Idx:** The index within the object dictionary.
- **Sidx:** Sub-index for finer control of entries.
- **Attr:** Attributes, such as **RO** (Read-Only) or **RW** (Read-Write).
- **Default**: Default value assigned to the parameter. If the default value is shown as "---", it means it is either undefined or may be assigned dynamically by the **PM-3133-CPS firmware**.

Additionally, any number with the suffix **"h"** is presented in **hexadecimal format**.


Copyright © ICP DAS Co., Ltd. All Rights Reserved. www.icpdas.com ✉ E-mail: service@icpdas.com

**General Communication Entries**

| Idx | Sidx | Description | Type | Attr | Default |
|---|---|---|---|---|---|
| 1000h | 0h | device type | UNSIGNED 32 | RO | --- |
| 1001h | 0h | error register | UNSIGNED 8 | RO | --- |
| 1003h | 0h | largest sub-index supported for “predefine error field” | UNSIGNED 8 | RO | 0h |
| | 1h | actual error (newest) | UNSIGNED 32 | RO | --- |
| | … | … | … | … | --- |
| | 5h | actual error (oldest) | UNSIGNED 32 | RO | --- |
| 1005h | 0h | COB-ID of Sync message | UNSIGNED 32 | RW | 80h |
| 1008h | 0h | manufacturer device name | VISIBLE_STRING | RO | |
| 1009h | 0h | manufacturer hardware version | VISIBLE_STRING | RO | --- |
| 100Ah | 0h | manufacturer software version | VISIBLE_STRING | RO | --- |
| 100Ch | 0h | guard time | UNSIGNED 16 | RW | 0 |
| 100Dh | 0h | life time factor | UNSIGNED 8 | RW | 0 |
| 1010h | 0h | largest sub-index supported for “store parameters” | UNSIGNED 8 | RO | 1 |
| | 1h | save all parameters | UNSIGNED 32 | RW | 0 |
| 1011h | 0h | largest sub-index supported for “restore default parameters” | UNSIGNED 8 | RO | 1 |
| | 1h | restore all default parameters | UNSIGNED 32 | RW | 0 |
| 1014h | 0h | COB-ID of EMCY | UNSIGNED 32 | RW | 80h+Node-ID |
| 1015h | 0h | inhibit time of EMCY | UNSIGNED 16 | RW | 0 |
| 1017h | 0h | heartbeat time | UNSIGNED 16 | RW | 0 |
| 1018h | 0h | largest sub-index supported for “identity object” | UNSIGNED 8 | RO | 1 |
| | 1h | vender ID | UNSIGNED 32 | RO | --- |
| 1F52 | 0h | largest sub-index supported for “firmware update” | UNSIGNED 8 | RO | 1 |
| | 1h | 1: start to update firmware | UNSIGNED 8 | WO | --- |
| 2010h | 0h | largest sub-index supported for “DO Power On Value” | UNSIGNED 8 | RO | 1 |
| | 1h | 2-bits DO power on value | UNSIGNED 8 | RW | 0 |


Copyright © ICP DAS Co., Ltd. All Rights Reserved. www.icpdas.com ✉ E-mail: service@icpdas.com

**SDO Communication Entries**

| Idx | Sidx | Description | Type | Attr | Default |
|---|---|---|---|---|---|
| 1200h | 0h | largest sub-index supported for “server SDO parameter” | UNSIGNED 8 | RO | 2 |
| | 1h | COB-ID form client to server (RxSDO) | UNSIGNED 32 | RO | 600h+Node-ID |
| | 2h | COB-ID form server to client (TxSDO) | UNSIGNED 32 | RO | 580h+Node-ID |

**TxPDO Communication Entries**

| Idx | Sidx | Description | Type | Attr | Default |
|---|---|---|---|---|---|
| 1800h | 0 | largest sub-index supported for “transmit PDO parameter” | UNSIGNED 8 | RO | 5 |
| | 1 | COB-ID used by PDO (Tx) | UNSIGNED 32 | RW | 180h+Node-ID |
| | 2 | transmission type | UNSIGNED 8 | RW | FFh |
| | 3 | inhibit time | UNSIGNED 16 | RW | 0 |
| | 4 | Reversed | … | … | … |
| | 5 | event timer | UNSIGNED 16 | RW | 0 |
| 1801h | 0 | largest sub-index supported for “transmit PDO parameter” | UNSIGNED 8 | RO | 5 |
| | 1 | COB-ID used by PDO (Tx) | UNSIGNED 32 | RW | 280h+Node-ID |
| | 2 | transmission type | UNSIGNED 8 | RW | FFh |
| | 3 | inhibit time | UNSIGNED 16 | RW | 0 |
| | 4 | Reversed | … | … | … |
| | 5 | event timer | UNSIGNED 16 | RW | 0 |
| 1802h | 0 | largest sub-index supported for “transmit PDO parameter” | UNSIGNED 8 | RO | 5 |
| | 1 | COB-ID used by PDO (Tx) | UNSIGNED 32 | RW | 380h+Node-ID |
| | 2 | transmission type | UNSIGNED 8 | RW | FFh |


Copyright © ICP DAS Co., Ltd. All Rights Reserved. www.icpdas.com ✉ E-mail: service@icpdas.com

| | | | | | |
|---|---|---|---|---|---|
| | 3 | inhibit time | UNSIGNED 16 | RW | 0 |
| | 4 | Reversed | … | … | … |
| | 5 | event timer | UNSIGNED 16 | RW | 0 |
| 1803h | 0 | largest sub-index supported for “transmit PDO parameter” | UNSIGNED 8 | RO | 5 |
| | 1 | COB-ID used by PDO (Tx) | UNSIGNED 32 | RW | 480h+Node-ID |
| | 2 | transmission type | UNSIGNED 8 | RW | FFh |
| | 3 | inhibit time | UNSIGNED 16 | RW | 0 |
| | 4 | Reversed | … | … | … |
| | 5 | event timer | UNSIGNED 16 | RW | 0 |
| 1804h | 0 | largest sub-index supported for “transmit PDO parameter” | UNSIGNED 8 | RO | 5 |
| | 1 | COB-ID used by PDO (Tx) | UNSIGNED 32 | RW | 80000000h |
| | 2 | transmission type | UNSIGNED 8 | RW | FFh |
| | 3 | inhibit time | UNSIGNED 16 | RW | 0 |
| | 4 | Reversed | … | … | … |
| | 5 | event timer | UNSIGNED 16 | RW | 0 |
| … | … | … | … | … | … |
| 1813h | 0 | largest sub-index supported for “transmit PDO parameter” | UNSIGNED 8 | RO | 5 |
| | 1 | COB-ID used by PDO (Tx) | UNSIGNED 32 | RW | 80000000h |
| | 2 | transmission type | UNSIGNED 8 | RW | FFh |
| | 3 | inhibit time | UNSIGNED 16 | RW | 0 |
| | 4 | Reversed | … | … | … |
| | 5 | event timer | UNSIGNED 16 | RW | 0 |


Copyright © ICP DAS Co., Ltd. All Rights Reserved. www.icpdas.com ✉ E-mail: service@icpdas.com

**TxPDO Mapping Communication Entries**

| Idx | Sidx | Description | Type | Attr | Default |
|---|---|---|---|---|---|
| 1A00h | 0 | largest sub-index supported for “transmit PDO mapping” | UNSIGNED 8 | RO | 2 |
| | 1 | read kW_a data | INTEGER 32 | RO | 3200 0120h |
| | 2 | read kWh_a data | INTEGER 32 | RO | 3201 0120h |
| 1A01h | 0 | largest sub-index supported for “transmit PDO mapping” | UNSIGNED 8 | RO | 2 |
| | 1 | read kW_b data | INTEGER 32 | RO | 3200 0220h |
| | 2 | read kWh_b data | INTEGER 32 | RO | 3201 0220h |
| 1A02h | 0 | largest sub-index supported for “transmit PDO mapping” | UNSIGNED 8 | RO | 2 |
| | 1 | read kW_c data | INTEGER 32 | RO | 3200 0320h |
| | 2 | read kWh_c data | INTEGER 32 | RO | 3201 0320h |
| 1A03h | 0 | largest sub-index supported for “transmit PDO mapping” | UNSIGNED 8 | RO | 2 |
| | 1 | read kW_tot data | INTEGER 32 | RO | 3200 0420h |
| | 2 | read kWh_tot data | INTEGER 32 | RO | 3201 0420h |
| 1A04h | 0 | largest sub-index supported for “transmit PDO mapping” | UNSIGNED 8 | RO | 2 |
| | 1 | read V_a data | INTEGER 32 | RO | 3202 0120h |
| | 2 | read I_a data | INTEGER 32 | RO | 3203 0120h |
| 1A05h | 0 | largest sub-index supported for “transmit PDO mapping” | UNSIGNED 8 | RO | 2 |
| | 1 | read V_b data | INTEGER 32 | RO | 3202 0220h |
| | 2 | read I_b data | INTEGER 32 | RO | 3203 0220h |
| 1A06h | 0 | largest sub-index supported for “transmit PDO mapping” | UNSIGNED 8 | RO | 2 |
| | 1 | read V_c data | INTEGER 32 | RO | 3202 0320h |
| | 2 | read I_c data | INTEGER 32 | RO | 3203 0320h |
| 1A07h | 0 | largest sub-index supported for “transmit PDO mapping” | UNSIGNED 8 | RO | 2 |
| | 1 | read V_avg data | INTEGER 32 | RO | 3202 0420h |
| | 2 | read I_avg data | INTEGER 32 | RO | 3203 0420h |
| 1A08h | 0 | largest sub-index supported for | UNSIGNED 8 | RO | 2 |


Copyright © ICP DAS Co., Ltd. All Rights Reserved. www.icpdas.com ✉ E-mail: service@icpdas.com

| | | | | | |
|---|---|---|---|---|---|
| | | “transmit PDO mapping” | | | |
| | 1 | read kvar_a data | INTEGER 32 | RO | 3204 0120h |
| | 2 | read kVA_a data | INTEGER 32 | RO | 3205 0120h |
| 1A09h | 0 | largest sub-index supported for “transmit PDO mapping” | UNSIGNED 8 | RO | 2 |
| | 1 | read kvar_b data | INTEGER 32 | RO | 3204 0220h |
| | 2 | read kVA_b data | INTEGER 32 | RO | 3205 0220h |
| 1A0Ah | 0 | largest sub-index supported for “transmit PDO mapping” | UNSIGNED 8 | RO | 2 |
| | 1 | read kvar_c data | INTEGER 32 | RO | 3204 0320h |
| | 2 | read kVA_c data | INTEGER 32 | RO | 3205 0320h |
| 1A0Bh | 0 | largest sub-index supported for “transmit PDO mapping” | UNSIGNED 8 | RO | 2 |
| | 1 | read kvar_tot data | INTEGER 32 | RO | 3204 0420h |
| | 2 | read kVA_tot data | INTEGER 32 | RO | 3205 0420h |
| 1A0Ch | 0 | largest sub-index supported for “transmit PDO mapping” | UNSIGNED 8 | RO | 2 |
| | 1 | read PF_a data | INTEGER 32 | RO | 3206 0120h |
| | 2 | read kVAh_a data | INTEGER 32 | RO | 3207 0120h |
| 1A0Dh | 0 | largest sub-index supported for “transmit PDO mapping” | UNSIGNED 8 | RO | 2 |
| | 1 | read PF_b data | INTEGER 32 | RO | 3206 0220h |
| | 2 | read kVAh_b data | INTEGER 32 | RO | 3207 0220h |
| 1A0Eh | 0 | largest sub-index supported for “transmit PDO mapping” | UNSIGNED 8 | RO | 2 |
| | 1 | read PF_c data | INTEGER 32 | RO | 3206 0320h |
| | 2 | read kVAh_c data | INTEGER 32 | RO | 3207 0320h |
| 1A0Fh | 0 | largest sub-index supported for “transmit PDO mapping” | UNSIGNED 8 | RO | 2 |
| | 1 | read PF_tot data | INTEGER 32 | RO | 3206 0420h |
| | 2 | read kVAh_tot data | INTEGER 32 | RO | 3207 0420h |
| 1A10h | 0 | largest sub-index supported for “transmit PDO mapping” | UNSIGNED 8 | RO | 2 |
| | 1 | read kvarh_a data | INTEGER 32 | RO | 3208 0120h |
| | 2 | read Freq_a data | INTEGER 32 | RO | 3209 0120h |


Copyright © ICP DAS Co., Ltd. All Rights Reserved. www.icpdas.com ✉ E-mail: service@icpdas.com

| | | | | | |
|---|---|---|---|---|---|
| 1A11h | 0 | largest sub-index supported for “transmit PDO mapping” | UNSIGNED 8 | RO | 2 |
| | 1 | read kvarh_b data | INTEGER 32 | RO | 3208 0220h |
| | 2 | read Freq_b data | INTEGER 32 | RO | 3209 0220h |
| 1A12h | 0 | largest sub-index supported for “transmit PDO mapping” | UNSIGNED 8 | RO | 2 |
| | 1 | read kvarh_c data | INTEGER 32 | RO | 3208 0320h |
| | 2 | read Freq_c data | INTEGER 32 | RO | 3209 0320h |
| 1A13h | 0 | largest sub-index supported for “transmit PDO mapping” | UNSIGNED 8 | RO | 2 |
| | 1 | read kvarh_tot data | INTEGER 32 | RO | 3208 0420h |
| | 2 | read Freq_avg data | INTEGER 32 | RO | 3209 0420h |


Copyright © ICP DAS Co., Ltd. All Rights Reserved. www.icpdas.com ✉ E-mail: service@icpdas.com

## 9.3.2. Manufacturer Specific Profile Area

The following table lists the special feature items for the **PM-3133-CPS**. Entries indexed from **0x3200 to 0x3209** record the power meter measurement parameters. These values are automatically updated each time the PM-3133-CPS boots.

- **0x320A:** Contains **meter parameter information.**
- **0x320B:** Stores system configuration parameters, including PT Ratio, CT Ratio, and other operating settings

  ✓ **PT Ratio:** Potential transformer ratio. The default value is **100**, with a unit of **0.01**.

  ✓ **CT Ratio**: Current transformer ratio. The default value is **1**, with a unit of **1**.

| Idx | Sidx | Description | Type | Attr | Default |
|---|---|---|---|---|---|
| 3200h | 0 | largest sub-index supported for “kW” | UNSIGNED 8 | RO | 4 |
| | 1 | kW_a | REAL 32 | RO | 0 |
| | 2 | kW_b | REAL 32 | RO | 0 |
| | 3 | kW_c | REAL 32 | RO | 0 |
| | 4 | kW_tot | REAL 32 | RO | 0 |
| 3201h | 0 | largest sub-index supported for “kWh” | UNSIGNED 8 | RO | 4 |
| | 1 | kWh_a | REAL 32 | RO | 0 |
| | 2 | kWh_b | REAL 32 | RO | 0 |
| | 3 | kWh_c | REAL 32 | RO | 0 |
| | 4 | kWh_tot | REAL 32 | RO | 0 |
| 3202h | 0 | largest sub-index supported for “Volt” | UNSIGNED 8 | RO | 4 |
| | 1 | Volt(V_a) | REAL 32 | RO | 0 |
| | 2 | Volt(V_b) | REAL 32 | RO | 0 |
| | 3 | Volt(V_c) | REAL 32 | RO | 0 |
| | 4 | Volt(V_avg) | REAL 32 | RO | 0 |
| 3203h | 0 | largest sub-index supported for “Amp” | UNSIGNED 8 | RO | 4 |
| | 1 | Amp(I_a) | REAL 32 | RO | 0 |
| | 2 | Amp(I_b) | REAL 32 | RO | 0 |


Copyright © ICP DAS Co., Ltd. All Rights Reserved. www.icpdas.com ✉ E-mail: service@icpdas.com

| | | | | | |
|---|---|---|---|---|---|
| | 3 | Amp(I_c) | REAL 32 | RO | 0 |
| | 4 | Amp(I_avg) | REAL 32 | RO | 0 |
| 3204h | 0 | largest sub-index supported for “kvar” | UNSIGNED 8 | RO | 4 |
| | 1 | kvar_a | REAL 32 | RO | 0 |
| | 2 | kvar_b | REAL 32 | RO | 0 |
| | 3 | kvar_c | REAL 32 | RO | 0 |
| | 4 | kvar_tot | REAL 32 | RO | 0 |
| 3205h | 0 | largest sub-index supported for “kVA” | UNSIGNED 8 | RO | 4 |
| | 1 | kVA_a | REAL 32 | RO | 0 |
| | 2 | kVA_b | REAL 32 | RO | 0 |
| | 3 | kVA_c | REAL 32 | RO | 0 |
| | 4 | kVA_tot | REAL 32 | RO | 0 |
| 3206h | 0 | largest sub-index supported for “PF” | UNSIGNED 8 | RO | 4 |
| | 1 | PF_a | REAL 32 | RO | 0 |
| | 2 | PF_b | REAL 32 | RO | 0 |
| | 3 | PF_c | REAL 32 | RO | 0 |
| | 4 | PF_tot | REAL 32 | RO | 0 |
| 3207h | 0 | largest sub-index supported for “kVAh” | UNSIGNED 8 | RO | 4 |
| | 1 | kVAh_a | REAL 32 | RO | 0 |
| | 2 | kVAh_b | REAL 32 | RO | 0 |
| | 3 | kVAh_c | REAL 32 | RO | 0 |
| | 4 | kVAh_tot | REAL 32 | RO | 0 |
| 3208h | 0 | largest sub-index supported for “kvarh” | UNSIGNED 8 | RO | 4 |
| | 1 | kvarh_a | REAL 32 | RO | 0 |
| | 2 | kvarh_b | REAL 32 | RO | 0 |
| | 3 | kvarh_c | REAL 32 | RO | 0 |
| | 4 | kvarh_tot | REAL 32 | RO | 0 |
| 3209h | 0 | largest sub-index supported for “Frequency” | UNSIGNED 8 | RO | 4 |
| | 1 | Freq_a | REAL 32 | RO | 0 |
| | 2 | Freq _b | REAL 32 | RO | 0 |


Copyright © ICP DAS Co., Ltd. All Rights Reserved. www.icpdas.com ✉ E-mail: service@icpdas.com

| | | | | | |
|---|---|---|---|---|---|
| | 3 | Freq _c | REAL 32 | RO | 0 |
| | 4 | Freq _avg | REAL 32 | RO | 0 |
| 320Ah | 0 | largest sub-index supported for “Total Harmonic Distortion” | UNSIGNED 8 | RO | 2 |
| | 1 | VTHD | REAL 32 | RO | 0 |
| | 2 | ITHD | REAL 32 | RO | 0 |
| 320Bh | 0 | largest sub-index supported for “System Parameter Setting” | UNSIGNED 8 | RO | 6 |
| | 1 | PT Ratio | UNSIGNED 16 | RW | 100 |
| | 2 | CT Ratio | UNSIGNED 16 | RW | 1 |
| | 3 | Wiring Mode<br>(Only work when SW9-SW10 is all off)<br>1: 1P2W<br>2: 1P3W<br>3: 3P3W2CT<br>4: 3P3W3CT<br>5: 3P4W3CT | UNSIGNED 8 | RW | 5 |
| | 4 | Energy Absolute Accumulated Mode<br>0: Enable<br>1: Disable | UNSIGNED 8 | RW | 0 |
| | 5 | Harmonic Phase Select<br>0: Disable<br>1: Phase A<br>2: Phase B<br>3: Phase C | UNSIGNED 8 | RW | 0 |
| | 6 | Display Voltage<br>0: Automatic<br>1: Show as Vln<br>2: Show as Vll | UNSIGNED 8 | RW | 0 |
| 320Ch | 0 | largest sub-index supported for “System Parameter Setting” | UNSIGNED 8 | RO | 3 |
| | 1 | Set Energy to Zero<br>0x55: Set all Meter to Zero | UNSIGNED 8 | WO | -- |
| | 2 | Reset to Factory Settings<br>0x55: Re-power the module after | UNSIGNED 8 | WO | -- |


Copyright © ICP DAS Co., Ltd. All Rights Reserved. www.icpdas.com ✉ E-mail: service@icpdas.com

| | | | | | |
|---|---|---|---|---|---|
| | | setting | | | |
| | 3 | Default Frequency<br>0x55: Auto<br>0x64: 50Hz<br>0x78: 60Hz | UNSIGNED 8 | RW | -- |
| 320Dh | 0 | largest sub-index supported for "System Information" | UNSIGNED 8 | RO | 6 |
| | 1 | Wiring Type<br>(Set wiring by Dip Switch SW9-SW10)<br>9: 1P2W<br>10: 1P3W<br>11: 3P3W2CT<br>12: 3P3W3CT<br>13: 3P4W3CT<br>14: 3P3W2CT (HW)<br>15: 3P3W3CT (HW)<br>16: 3P4W3CT (HW) | UNSIGNED 16 | RO | 13 |
| | 2 | Phase Sequence<br>(Only work when 3P4W3CT)<br>0: Negative (ACB)<br>1: Positive (ABC) | UNSIGNED 16 | RO | -- |
| | 3 | Model Type<br>0x0001: 50Hz<br>0x0002: 60Hz | UNSIGNED 16 | RO | 2 |
| | 4 | Enable VLL Compensation<br>(Only work for 3P3W3CT wiring)<br>0 = OFF<br>1 = ON | UNSIGNED 8 | RW | 0 |
| | 5 | Disable HW Wiring Dipswitch<br>(SW9, SW10 always in software mode)<br>0 = OFF<br>1 = ON | UNSIGNED 8 | RW | 0 |
| | 6 | Enable Phase B Zero Voltage<br>0 = OFF<br>1 = ON | UNSIGNED 8 | RW | 0 |
| 3220h | 0 | largest sub-index supported for "Ratio Scale" | UNSIGNED 8 | RO | 3 |


Copyright © ICP DAS Co., Ltd. All Rights Reserved. www.icpdas.com ✉ E-mail: service@icpdas.com

| | | | | | |
|---|---|---|---|---|---|
| | 1 | CT Ratio Scale<br>Range: 6 ~ 14 | INTEGER 16 | RW | 10 |
| | 2 | PT Ratio Scale<br>Range: 6 ~ 14 | INTEGER 16 | RW | 8 |
| | 3 | Max Value of Accumulated Energy<br>0: 9999999.9<br>1: 99999999.9<br>2: 999999999.9 | INTEGER 16 | RW | 0 |
| 3230h | 0 | largest sub-index supported for “Bi-direction Energy” | UNSIGNED 8 | RO | 4 |
| | 1 | Bi_Positive_kWh | REAL 32 | RO | -- |
| | 2 | Bi_Negative_kWh | REAL 32 | RO | -- |
| | 3 | Bi_Net_kWh | REAL 32 | RO | -- |
| | 4 | Bi_Total_kWh | REAL 32 | RO | -- |
| 3231h | 0 | largest sub-index supported for “Signed PF” | UNSIGNED 8 | RO | 4 |
| | 1 | Signed PF_A | REAL 32 | RO | -- |
| | 2 | Signed PF_B | REAL 32 | RO | -- |
| | 3 | Signed PF_C | REAL 32 | RO | -- |
| | 4 | Signed PF_tot | REAL 32 | RO | -- |


Copyright © ICP DAS Co., Ltd. All Rights Reserved. www.icpdas.com ✉ E-mail: service@icpdas.com

## 9.3.3. Store and Restore Object

This section describes how users can store application settings and restore the default settings on the PM-3133-CPS.

- To **store application settings**, write the value 65766173h to the object at **index 1010h**, **sub-index 1.**
- To **restore the default factory settings**, write the value 64616F6Ch to the object at **index 1011h**, **sub-index 1** and reboot the module.

The following table outlines the specific objects that will be stored or restored when these actions are performed.

Table: Objects Stored or Restored During Operations

| Index | Sub-index | Description |
|---|---|---|
| 100Ch | 0 | Guard time |
| 100Dh | 0 | Life time factor |
| 1017h | 0 | Heartbeat time |
| 1800h | 1~5 | TxPDO1 parameter |
| …… | …… | …… |
| 1813h | 1~5 | TxPDO20 parameter |
| 2010h | 1 | DO power on value |

**Note:**

For **power meter system parameters settings** (such as object **320Bh**), users need to write the value 55h to index 320Ch, sub-index 02h to load the default factory settings.


Copyright © ICP DAS Co., Ltd. All Rights Reserved. www.icpdas.com ✉ E-mail: service@icpdas.com

## 9.3.4. Firmware Update Object

This section describes how to update the firmware of the PM-3133-CPS via CAN Bus.
**Note**: This function is supported only on firmware version **"3.60-20250618"** and later. (Check the version via **Object 0x100A**.)
Before starting the firmware update process, users must prepare the following:

- The **FW_Update_CAN_Tool** firmware update utility.
- A compatible **ICP DAS CAN module**. (see tool interface for supported modules)

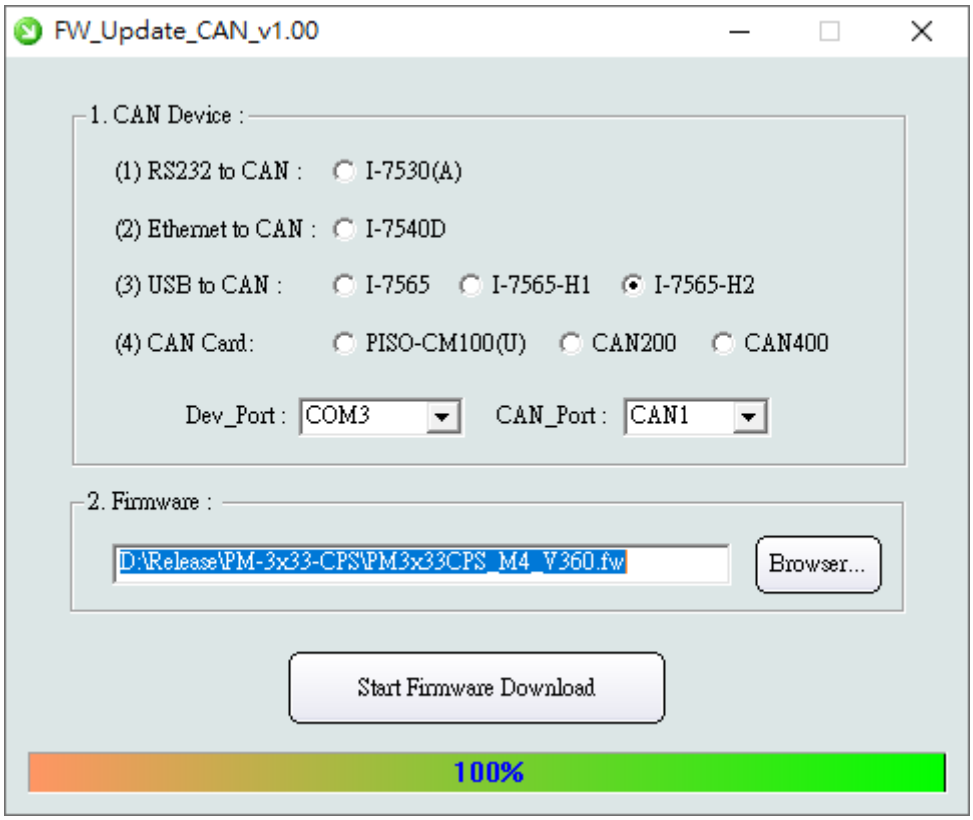


The firmware update procedure is as follows:

- **Enter Firmware Update Mode**: Write **1** to **Object 1F52h, Sub-index 1**. If successful, the **RUN LED** will turn off and the device will enter update mode.
- **Start Firmware Update:** Open the update tool, select the CAN device and port, choose the firmware file, and then click **"Start Firmware Download"**. The process takes about **1–2 minutes**, with the **RFU LED** blinking rapidly. The device will reboot automatically after completion.
- **Cancel Update Mode:** If you don't proceed with the update, simply power cycle the device to exit update mode.


Copyright © ICP DAS Co., Ltd. All Rights Reserved. www.icpdas.com ✉ E-mail: service@icpdas.com

# 10. Appendix: Questions & Answers

**Q1. Can we use other 5A CTs (e.g., 300/5) directly with the input current terminals of the PM-3133 series?**

**Answer:** No, you cannot directly use other 5A CTs, such as 300/5 or 100/5, with the PM-3133 series because the input current terminals are designed for milliamp (mA) inputs only. Directly connecting 5A CTs may cause fatal damage to the device. Use the included split-type clip-on CT provided with the PM-3133 series to connect to the secondary 5A output of other CTs for testing.

**Q2. Can I replace the failed split-type clip-on CT by detaching it? Is there anything I should pay attention to?**

**Answer:** Yes, you can replace a failed CT, but always ensure that the CT is disconnected from the power cable of the monitored equipment before detaching the CT wires from the meter terminals. Failure to do so may result in severe injury.

**Q3. How should I handle a split-type clip-on CT if the turning point or internal Ferrite-core breaks?**

**Answer:** A damaged CT will yield inaccurate measurements and should no longer be used. Replace it with a new CT.

**Q4. Can I mix and match the CTs and meters from multiple PM-3133 series units?**

**Answer:** No, do not mix CTs and meters between different units. Each smart meter and its attached CTs are calibrated as a set. Mixing them may result in inaccurate measurements.


Copyright © ICP DAS Co., Ltd. All Rights Reserved. www.icpdas.com ✉ E-mail: service@icpdas.com

**Q5. What should I do if the power consumption readings (kW) are negative?**

**Answer:**

(1) Verify the connections on the current input terminals to ensure they follow the sequence **CT1-K, CT1-L, CT2-K, CT2-L, CT3-K,** and **CT3-L**, in the correct white-black pattern.

(2) Check the current flow direction (K → L) to confirm it matches the arrow direction on the clip-on CT.

(3) An incorrect wiring sequence for voltage or current inputs may result in phase angle calculation errors. This can cause the power meter to misinterpret the direction of power flow, leading to negative KW readings or abnormally low Power Factor (PF) values.

**Q6. Why can't the PC connect to the meter over RS-485？**

**Answer:**

(1) **Confirm the Modbus address:** Ensure the Modbus address is set correctly. The default value is 1.

(2) **Check the baud rate:** The default baud rate is 19200.

(3) **Verify the stop bit:** Ensure the stop bit is configured to 1.

(4) **Check the RS-485 wiring:** Verify that the D+/D- connections are correctly wired.

(5) **Ensure the RS-485 master provides bias:** The RS-485 master must provide bias for the PM-3133 series. If not, use a tM-SG4 or SG-785 module to supply the required bias. All ICP DAS controllers and converters are equipped to provide this bias.

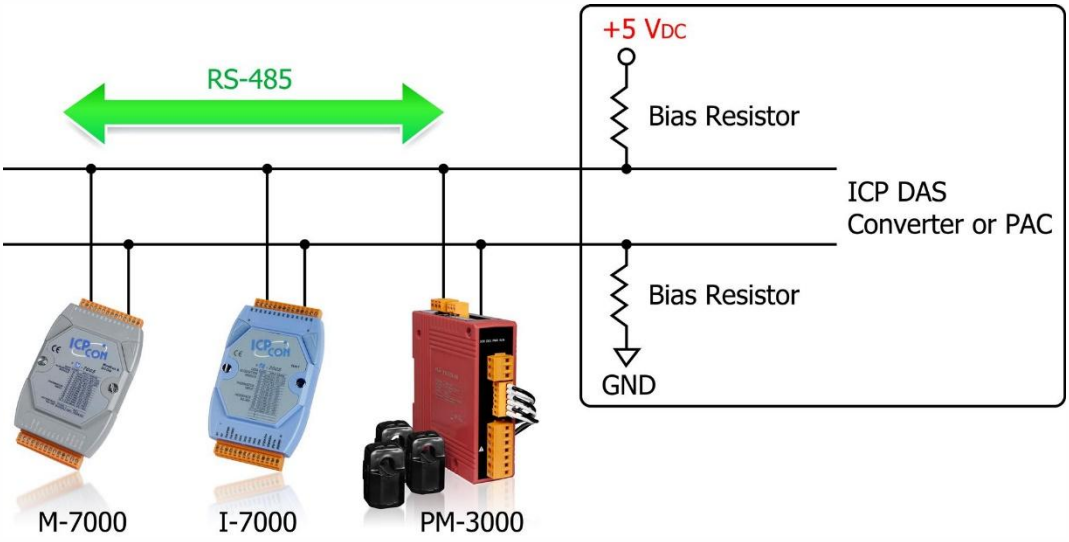



Copyright © ICP DAS Co., Ltd. All Rights Reserved. www.icpdas.com ✉ E-mail: service@icpdas.com

**Q7. What power cable diameter (in mm) should be used with the various CTs?**

**Answer:**

- **≤Φ10 mm:** Use a 60A CT.
- **Φ10 to Φ16 mm:** Use a 100A CT.
- **Φ16 to Φ24 mm:** Use a 200A CT.
- **Φ36 mm:** Use a 300A or 400A CT.

**Q8. What if the wire length for the split-type clip-on CT is insufficient?**

**Answer:**

- PM-3133-xxx CTs: Standard length is 1.8 m
- PM-3133-xxxP CTs: Standard length is 4 m
- CT cable length can be extended to 8 meters (excluding Rogowski coil type CT), with no loss in accuracy. It is recommended to use twisted pair wires with AWG 18–14 (cross-sectional area 0.75–2.0 mm²) to reduce interference.
- For custom lengths, contact ICP DAS.


Copyright © ICP DAS Co., Ltd. All Rights Reserved. www.icpdas.com ✉ E-mail: service@icpdas.com

**Q9. How can I measure currents exceeding 400A?**

**Answer:** The maximum current range for the CTs used with the PM-3133-xxxP is **400A**. If the target current exceeds 400A, consider the following solution:

For example, to measure a current of up to **800A**, use a **primary CT** with the appropriate output and configure the **CT ratio** in the PM-3133 to scale the readings correctly.

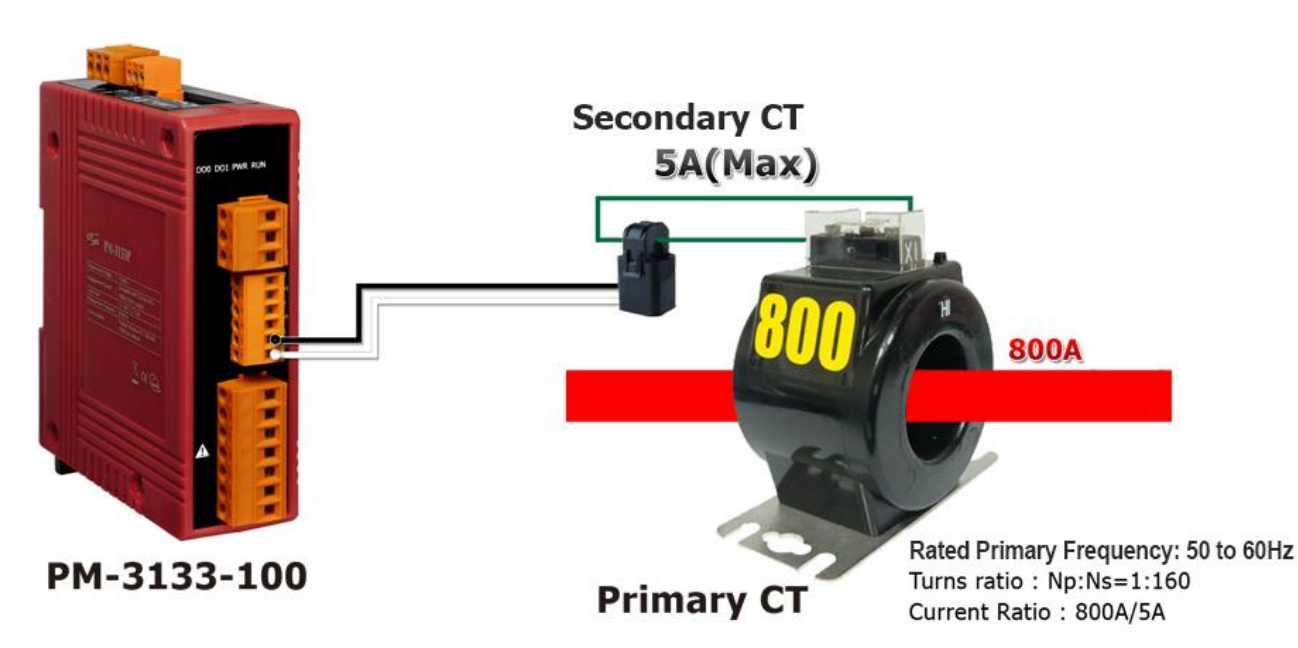


**Note:**

A. The accuracy of the primary CT will affect the measurement accuracy.
B. Even if the primary CT has a maximum output of 5A, do not connect it directly to the PM-3133 or PM-3133P.


Copyright © ICP DAS Co., Ltd. All Rights Reserved. www.icpdas.com ✉ E-mail: service@icpdas.com

**Q10. What is the difference between line-to-line voltage and line-to-ground voltage?**

**Answer:**

In a three-phase wye-connected system:

**Line-to-line voltage** is the voltage between terminals A-B, B-C, and A-C.

**Line-to-ground voltage** is the voltage between terminals A-N, B-N, and C-N.

**Calculation:**

Line-to-ground voltage = Line-to-line voltage ÷ √3 (approximately 1.73)

**Example:**

In a 380V wye system, the line-to-line voltage is 380V, so the line-to-ground voltage is 380 ÷ 1.73 = 220V.

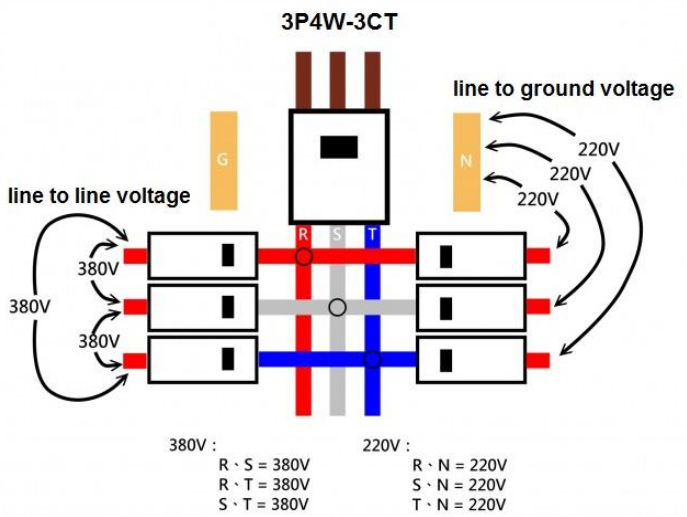


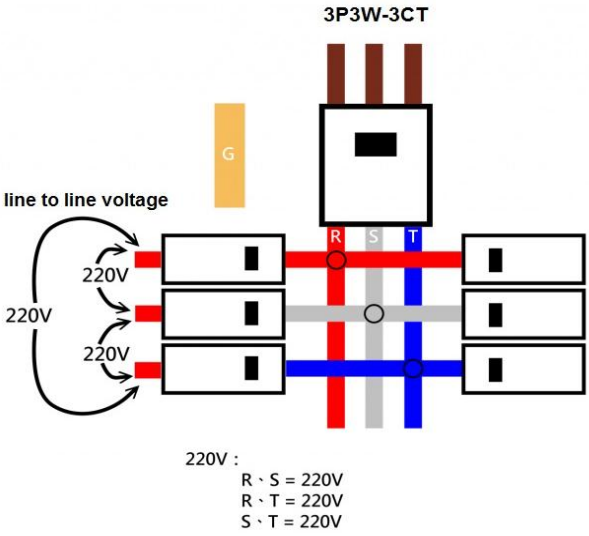




Copyright © ICP DAS Co., Ltd. All Rights Reserved. www.icpdas.com ✉ E-mail: service@icpdas.com

**Q11. How do I set the [Display Voltage] register to correctly display line-to-ground voltage or line-to-line voltage?**

**Answer:**

The voltage [V_x] register in the Modbus register table can be configured to display either line-to-ground or line-to-line voltage by adjusting the [Display Voltage] register.

Depending on the wiring type, different [Display Voltage] values are required. If the voltage reading is not as expected, refer to the table below and ensure the correct setting:

| Wiring Type | Line-to-Ground Voltage | Line-to-Line Voltage |
|---|---|---|
| 3P3W-2CT | [Display Voltage] = 1 (Show as Vln) | [Display Voltage] = 0 (Default) |
| 3P3W-3CT | [Display Voltage] = 0 (Default) | [Display Voltage] = 2 (Show as Vll) |
| 3P4W-3CT | [Display Voltage] = 0 (Default) | [Display Voltage] = 2 (Show as Vll) |

**Q12. What is the harmonic (THD) analysis capability?**

**Answer:**

The number of harmonics **N** that can be analyzed within the 2.8 kHz pass band is determined by the formula:

**N = [2800/f], N ≤ 63**

Here, **N** must be a whole number. The maximum number of harmonics that the Energy Metering IC can analyze is 63.


Copyright © ICP DAS Co., Ltd. All Rights Reserved. www.icpdas.com ✉ E-mail: service@icpdas.com

**Q13. How do I measure Voltage above 500V?**

**Answer:**

For service voltage above 500 Vac, voltage transformers (PTs) are used to step down the voltage to a range that compatible with the PM-3133 meter.



***Selecting a Transformer:***

- **Input Voltage:**
  Ensure the transformer is designed to operate at your facility's supply voltage (e.g., **PRI. Voltage 720V; SEC. Voltage 120V**). Check the connection diagram for compatibility with the wiring configuration (e.g., three-phase Y or delta) and confirm the correct phase sequence.

- **PT Ratio:**
  The addition of potential transformers (PTs) reduces the measured voltage by the PT ratio (e.g., 6:1). In this case, a 720 Vac input would be transformed to 120 Vac. Since the meter receives 120 Vac, the readings must be scaled by the PT ratio (in this example, multiplied by 6) to reflect the correct voltage.

- **Frequency:**
  Ensure the transformer is rated for the appropriate frequency. Most systems in the United States operate at **60 Hz**, while some other regions may require **50 Hz**-rated transformers.

- **Accuracy:**
  The accuracy of the Transformer (PT) (e.g., **1%** or **3%**) will affect the precision of the measurement. Choose a transformer with an accuracy rating that meets your requirements.

- **Rated Output (VA):**
  Ensure the transformer has an adequate power rating to handle the load. For example, a **150 VA** transformer (50VA per phase) would be suitable for many applications.


Copyright © ICP DAS Co., Ltd. All Rights Reserved. www.icpdas.com ✉ E-mail: service@icpdas.com

**Q14. Can the Power Meter be connected to a remote display via RS-485?**

**Answer:**

**A:** The Power Meter can be connected to **VPD-13x** or **VPD-14x** series displays via RS-485 for remote monitoring.

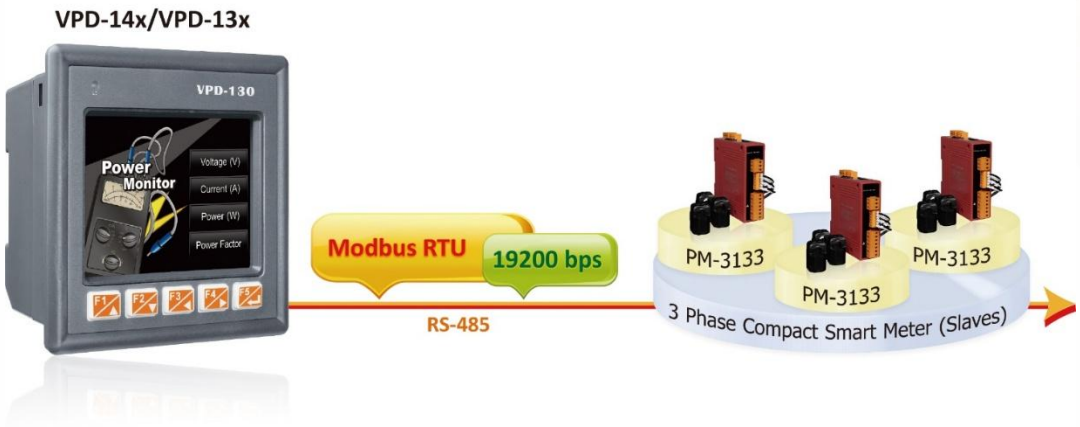


**B: Two Masters Sharing One Slave (via tSH-735):**

This feature allows two master devices, connected to different serial ports, to share access to the same slave device.

- **Modbus Mode:** Converts between the Modbus RTU and Modbus ASCII protocols.
- **Raw Data Mode:** Supports DCON or other query-response protocols.
- **Flexible Communication:** Different **baud rates** and **data formats** can be configured for each serial port independently.
- **Built-in Cache:** The caching mechanism reduces communication load by eliminating duplicated queries when both master devices request the same information.

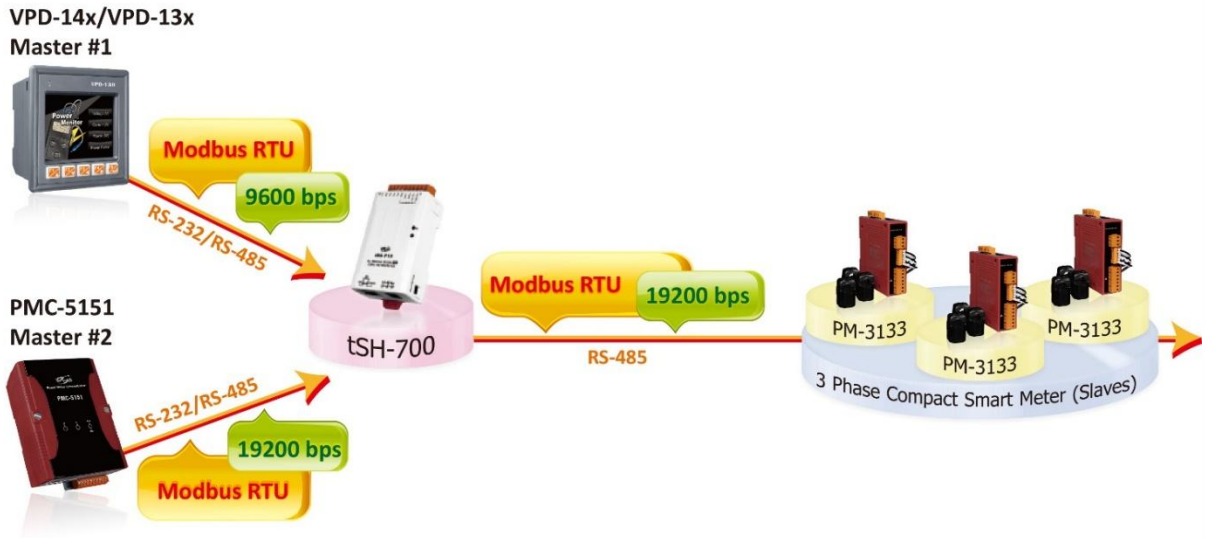



Copyright © ICP DAS Co., Ltd. All Rights Reserved. www.icpdas.com ✉ E-mail: service@icpdas.com

**Q15. How do I change the units of the [PT Ratio] and [CT Ratio] register values?**

**Answer:**

Users can change the unit of the [PT Ratio] and [CT Ratio] register values by setting the values of the [PT Ratio Scale] and [CT Ratio Scale] registers.

The actual unit of the [PT Ratio] and [CT Ratio] is calculated using the following formula, which is based on powers of 10:

**Unit of Ratio Value = 10^( X-10 ), 6≦X≦14,**

**X is the register value of [PT Ratio Scale] or [CT Ratio Scale]**

Examples:

- When **[PT Ratio Scale]** = 8, the unit of PT Ratio is **0.01** ( i.e., 10^(8-10) =10^(-2) )
- When **[CT Ratio Scale]** = 10, the unit of CT Ratio is **1** ( i.e., 10^(10-10) = 10 ^0 )



Copyright © ICP DAS Co., Ltd. All Rights Reserved. www.icpdas.com ✉ E-mail: service@icpdas.com

**Q16. What is the difference between the [PF_x] and [SignedPF_x] registers?**

**Answer:**

The **PF_a**, **PF_b**, **PF_c**, **PF_total** registers provide **unsigned power factor** values, ranging only from **0 to +1**.

- [0x110A-0x110B]: Phase A's unsigned PF (float)
- [0x111C-0x111D]: Phase B's unsigned PF (float)
- [0x112E-0x112F]: Phase C's unsigned PF (float)
- [0x1140-0x1141 ]: Total unsigned PF (float)

The **SignedPF_a**, **SignedPF _b**, **SignedPF _c**, and **SignedPF _total** registers provide signed power factor values(float), which indicate the direction of power flow based on the signs of active power (P) and reactive power (Q):

- [0x11A2, 0x11A3]: Phase A's signed PF (float)
- [0x11A4, 0x11A5]: Phase B's signed PF (float)
- [0x11A6, 0x11A7]: Phase C's signed PF (float)
- [0x11A8, 0x11A9]: Total signed PF (float)

**Signed PF values follow these rules based on power quadrants:**

- **Quadrant 1:** P > 0, Q > 0 → PF range: **0 to +1**
- **Quadrant 2:** P < 0, Q > 0 → PF range: **-2 to -1**
- **Quadrant 3:** P < 0, Q < 0 → PF range: **-1 to 0**
- **Quadrant 4:** P > 0, Q < 0 → PF range: **+1 to +2**


Copyright © ICP DAS Co., Ltd. All Rights Reserved. www.icpdas.com ✉ E-mail: service@icpdas.com

**Q17. Why does using the 3P3W-2CT method to measure kWh in a 3P3W system cause larger errors?**

**Answer:**

The 3P3W-2CT method helps reduce installation cost, but its calculation principle assumes a balanced three-phase load. Therefore, significant errors may occur under the following conditions:

1. **Three-phase imbalance**
   - If loads are unbalanced or single-phase loads dominate, measurement errors will occur.
2. **Harmonic distortion**
   - Harmonics distort voltage and current waveforms. Uneven harmonic distribution across phases increases errors.
3. **Wiring or configuration errors**
   - Incorrect CT direction, phase sequence, or meter settings directly affect kWh accuracy.
4. **Low power factor condition**
   - When the power factor drops below 0.5, one phase in the 2CT method may momentarily measure negative kWh.
   - If the meter is configured to use absolute kWh accumulation, reverse power is still accumulated as positive energy, which causes overestimation of total energy.

**Conclusion:**

The 3P3W-2CT method is only suitable for **balanced three-phase systems with low harmonic distortion**. For unbalanced loads or systems with significant harmonics, the **3P3W-3CT method** is recommended for accurate measurement.


Copyright © ICP DAS Co., Ltd. All Rights Reserved. www.icpdas.com ✉ E-mail: service@icpdas.com

**Q18. What is the function of Modbus register [Enable Phase B Zero Voltage]?**

**Answer:**

The Modbus register [Enable Phase B Zero Voltage] is applicable only when the wiring mode is **3P3W-2CT**.

- When the register is set to **Enable (Value = 1)**, the voltage value of Phase B will be forced to zero.
- When the register is set to **Disable (Value = 0)**, the actual voltage value of Phase B will be displayed.

This function prevents misinterpretation of Phase B voltage under 3P3W-2CT wiring.

**Q19. I would like to read voltage and current values via PDOs, but the manual does not list the corresponding PDO COB-IDs. How can I read these values? (Applicable to PM-3133-CPS / PM-3133P-CPS / PM-3133-RCT-CPS)**

**Answer:**

The reason and solution are as follows:

- In the standard CANopen protocol, **only PDOs 1, 2, 3, and 4 have default PDO COB-IDs**.
- The voltage and current values are mapped to **PDOs 5, 6, 7, and 8**, which do not have default COB-IDs.
- Therefore, users must manually configure the PDO COB-IDs for the following PDO Communication Parameter objects:
  - PDO 5 → Object **0x1804-01**
  - PDO 6 → Object **0x1805-01**
  - PDO 7 → Object **0x1806-01**
  - PDO 8 → Object **0x1807-01**
- After the PDO COB-IDs are configured, the voltage and current values can be received via the assigned COB-IDs.


Copyright © ICP DAS Co., Ltd. All Rights Reserved. www.icpdas.com ✉ E-mail: service@icpdas.com