NS-205PSE-IP67 Series

Industrial 5-port Unmanaged IP67 Ethernet Switch with PoE

NS-205-IP67 Series

Industrial 5-port Unmanaged IP67 Ethernet Switch

NS-205PSE-IP67
NS-205-IP67

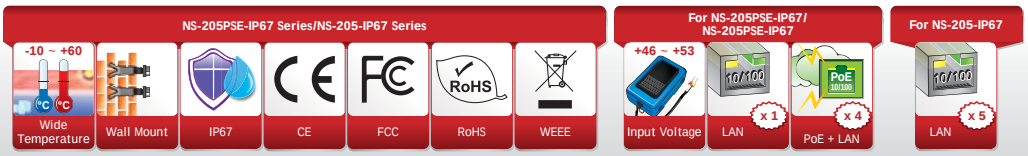

Features

- Automatic MDI/MDI-X crossover for plug-and-play
- Store-and-forward architecture
- Each port supports both 10/100 Mbps speed auto negotiation
- Full duplex IEEE 802.3x and half duplex backpressure flow control
- Rugged RJ-45 connector for anti-vibration and shock
- IP67 grade protection approval
- 4 PoE ports with Power Sourcing Equipment (PSE) operation (NS-205PSE-IP67 series)
- Auto-detection of PD (powered devices) and automatic power management (NS-205PSE-IP67 series)
- Over-temperature, over-current and over/under-voltage detection (NS-205PSE-IP67 series)

Introduction

The NS-205PSE-IP67/NS-205-IP67 is designed for industrial applications in harsh environments. The rugged RJ-45 ensure tight, robust connections, and guarantee reliable operation, even for applications that are subject to high vibration and shock.

The NS-205PSE-IP67 PoE switch provides 5 fast Ethernet with 4 IEEE 802.3af compliant PoE ports. The switch is classified as power source equipment (PSE) and provides up to 15.4 W of power per port.

The Ethernet switch supports IEEE 802.3/802.3u/802/3x with 10/100M, full/half-duplex, MDI/MDI-X auto-sensing, and provide an economical solution for your industrial Ethernet network.

Comparison Table of 5/8-port IP67 Ethernet Switch

Mode Name	NS-205-IP67	NS-205PSE-IP67	NS-208PSE-IP67	NS-208-IP67
PoE	–	802.3af x 4	802.3af x 8	–
Input Voltage Range	+10 VDC ~ +30 VDC (1 kV Isolated)	+46 VDC ~ +53 VDC		+12 VDC ~ +53 VDC
Installation	Wall Mounting	Wall Mounting	Wall Mounting	
Dimensions (W x L x H) (Unit: mm)	85 x 76 x 137	85 x 76 x 137	190 x 155 x 104	

Specifications

Models	NS-205PSE-IP67	NS-205-IP67
Technology		
Standards	IEEE 802.3, 802.3u, 802.3x, 10/100 Base-T(X) auto negotiation speed, F/H duplex mode, and auto MDI/MDI-X connection	
Processing Type	Store & forward; wire speed switching	
MAC Addresses	1024	
Memory Bandwidth	2 Gbps	1.4 Gbps
Frame Buffer Memory	512 Kbit	256 Kbit
Flow Control	IEEE 802.3x flow control, back pressure flow control	
Interface		
LED Indicators	PWR, Link/Act , Power Device is detected	PWR, 10/100M, Link/Act
Ethernet Isolation	1500 V_{rms} 1 minute	
Connector	Rugged RJ-45	
Power Input		
Input Voltage Range	+46 V_{DC} ~ +53 V_{DC} for PoE output	+10 V_{DC} ~ +30 V_{DC} (1 kV Isolated)
Power Consumption	0.05 A @ 48 V_{DC} without PD loading; 1.45 A @ 48 V_{DC} with PD full loading	0.12 A @ 24 V_{DC}
Protection	Power reverse polarity protection	
Connector	IP67 PWR Plug	
PoE Technology		
PoE Compliance	100% IEEE 802.3af compliant	–
PoE Classification	PSE (Power Sourcing Equipment)	–
PoE Voltage	+48 V_{DC} depending on power input	–
PoE Power	Up to 15.4 watts per channel	–
PoE Operation	Automatic detection and power management	–
PoE Pin Assignments	V+ (Pin 1, 2), V- (Pin 3, 6)	–
PoE Disconnect Mode	DC disconnect	–
Mechanical		
Casing	Plastic (Flammability UL 94V-0)	
Environmental Rating	Protection rating IP67 for Operating Temperature -10 °C ~ +60 °C	
	Protection rating IP66 for Operating Temperature -40 °C ~ +75 °C	
Dimensions (W x L x H)	85 mm x 76 mm x 137 mm	85 mm x 76 mm x 137 mm
Installation	Wall mounting	Wall mounting
Environment		
Operating Temperature	-10 °C ~ +60 °C (Protection rating IP67)	
	-40 °C ~ +75 °C (Protection rating IP66)	
Storage Temperature	-10 °C ~ +60 °C (Protection rating IP67)	
	-40 °C ~ +75 °C (Protection rating IP66)	
Ambient Relative Humidity	100% RH for Operating Temperature -10 °C ~ +60 °C	
	10% ~ 90% RH, non-condensing for Operating Temperature -40 °C ~ +75 °C	

Appearance

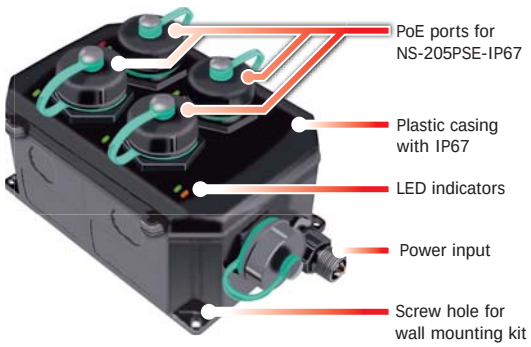

Applications

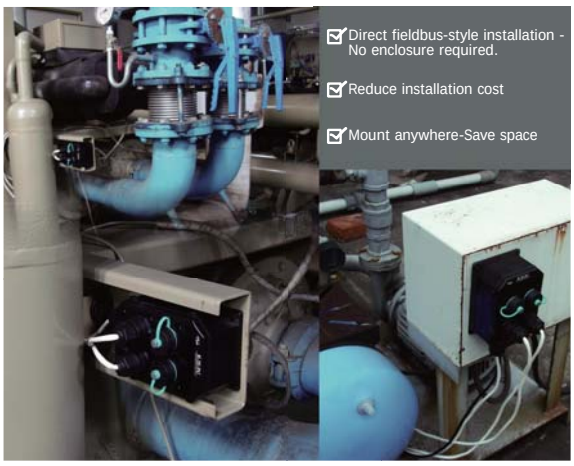

Industrial
IP67
5-port
Unmanaged
Ethernet Switch
PoE
NS-205PSE-IP67
NS-205-IP67
IP67 grade protection approval
Rugged RJ-45 connector for anti-vibration and shock

Dimensions (Units: mm)

NS-205PSE-IP67/NS-205-IP67

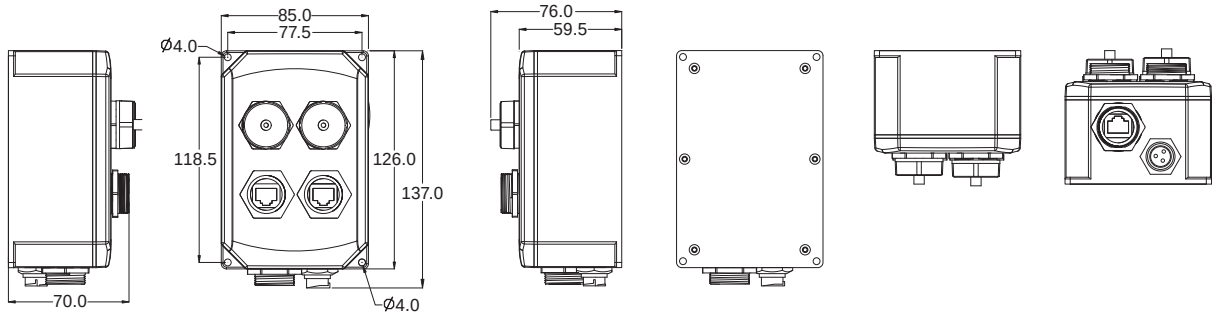

Left Side View | Front View | Right Side View | Rear View | Top View | Bottom View

IP67 Ethernet Cap with Tether

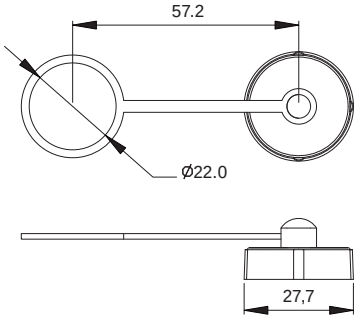

IP67 Ethernet Plug

Cable Dia:
Max. 7.0 mm
Min. 5.5 mm

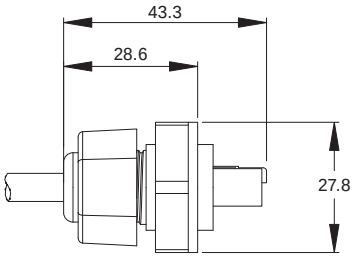

IP67 PWR Plug

Cable Dia:
Max. 6.5 mm
Min. 5.0 mm

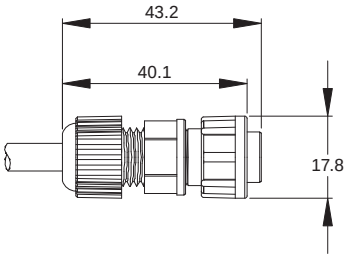

Ordering Information

NS-205PSE-IP67 CR	Industrial 5-port unmanaged IP67 Ethernet switch with PoE Includes IP67 RJ-45 Plug x 5, IP67 Power Plug x 1, Cap with Tether x 5 (RoHS)
NS-205-IP67 CR	Industrial 5-port unmanaged IP67 Ethernet switch Includes IP67 RJ-45 Plug x 5, IP67 Power Plug x 1, Cap with Tether x 5 (RoHS)

Accessories

MDR-60-48	48 V/1.25 A, 60 W Power Supply with DIN-Rail Mounting
DIN-KA52F-48	48 V/0.52 A, 25 W Power Supply with DIN-Rail Mounting
DR-120-48	48 V/2.5 A,120 W Power Supply with DIN-Rail Mounting

IP67 RJ-45 Plug	IP67 Power Plug	Cap with Tether
4SASO-001	4SIO1K0000016	4SASO-0004