I-8112iW-G

2-port Isolated RS-232 Module

Features

- Serial Port with +/-4 kV ESD Protection
- Baud Rate of up to 115200 bps
- 2500 Vrms Isolation
- Internal 128-byte Hardware FIFO for each Port
- LED Indicators for TxD, RxD and Power Status

Introduction

The I-8112iW-G provides 2 isolated RS-232 serial ports. It is equipped with a 128-byte hardware FIFO for each port and offers speeds up to 115.2 kbps with support for full-duplex communication.

In the harsh industrial environment, the onboard ESD protection devices can divert this potentially damaging charge away from sensitive circuitry and protect the I-8112iW from permanent damage.

The serial communication modules are designed for use with intelligent devices like bar code readers, serial printers, intelligent sensors, instrumentation equipment, computers, and almost any device with an RS-232 port.

System Specifications

LED Indicators/Display	
Power	1 LED
TxD	2 LEDs
RxD	2 LEDs
Isolation	
Intra-module Isolation, Field-to-Logic	2500 Vrms
EMS Protection	
ESD (IEC 61000-4-2)	±4 kV Contact for each Terminal
Power	
Power Consumption	1.5 W
Mechanical	
Dimensions (W × L × H)	31 mm x 86 mm x 114 mm
Environment	
Operating Temperature	-25 ~ +75 °C
Storage Temperature	-40 ~ +85 °C
Humidity	10 ~ 90% RH, Non-condensing

I/O Specifications

RS-232 Interface	
Number of Ports	2
Interface	TxD, RxD, RTS, CTS, DSR, DTR, DCD, RI, GND
Controller	16C950 Compatible
	Speed: 115200 bps max.
	Data Bit: 5, 6, 7, 8
	Stop Bit: 1, 1.5, 2
	Parity: None, Even, Odd, Mark, Space
	FIFO: Internal 128 bytes for each port
Interrupt	Shared Interrupt
Bus	Parallel I/O Module
Connector	DB-9 (Male)

Wire Connections

DTE Device (Computer) **DB9**		**DTE to DCE** Connections	DCE Device (Modem) **DB9**	
Pin# DB9	RS-232 Signal Names	Signal Direction	Pin# DB9	RS-232 Signal Names
#1 Carrier Detector	DCD	←	#1 Carrier Detector	DCD
#2 Receive Data	RxD	←	#2 Transmit Data	TxD
#3 Transmit Data	TxD	→	#3 Receive Data	RxD
#4 Data Terminal Ready	DTR	→	#4 Data Set Ready	DSR
#5 Signal Ground/Common (SG)	GND	↔	#5 Signal Ground/Common (SG)	GND
#6 Data Set Ready	DSR	←	#6 Data Terminal Ready	DTR
#7 Request to Send	RTS	→	#7 Clear to Send	CTS
#8 Clear to Send	CTS	←	#8 Request to Send	RTS
#9 Ring Indicator	RI	←	#9 Ring Indicator	RI
Soldered to DB9 Metal-Shield	FGND	↔	Soldered to DB9 Metal-Shield	FGND

3-wire RS-232 Wiring

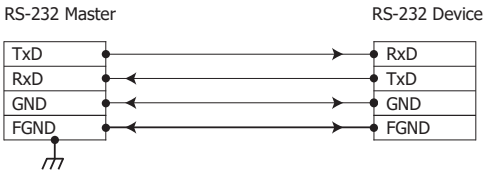

Dimensions (Units: mm)

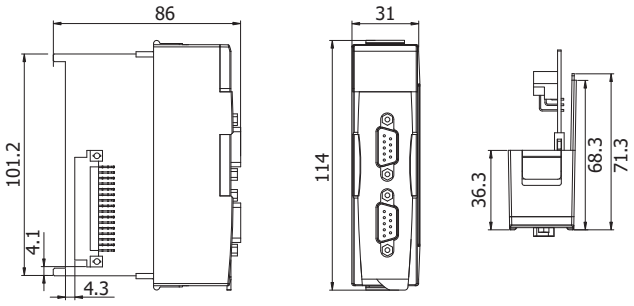

Left View | Front View | Top View

Pin Assignments

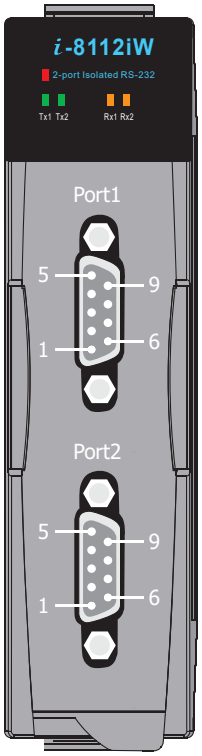

Pin Assignment	Terminal No.	Terminal No.	Pin Assignment
GND1	05	09	RI1
DTR1	04	08	CTS1
TxD1	03	07	RTS1
RxD1	02	06	DSR1
DCD1	01		

Port1
9-pin Male
D-Sub Connector

Pin Assignment	Terminal No.	Terminal No.	Pin Assignment
GND2	05	09	RI1
DTR2	04	08	CTS2
TxD2	03	07	RTS2
RxD2	02	06	DSR2
DCD2	01		

Port2
9-pin Male
D-Sub Connector

Ordering Information

I-8112iW-G CR	2-port Isolated RS-232 Module (Gray Cover) (RoHS)

Accessories

CA-0915	9-Pin Male-Female D-Sub Cable, 1.5 m