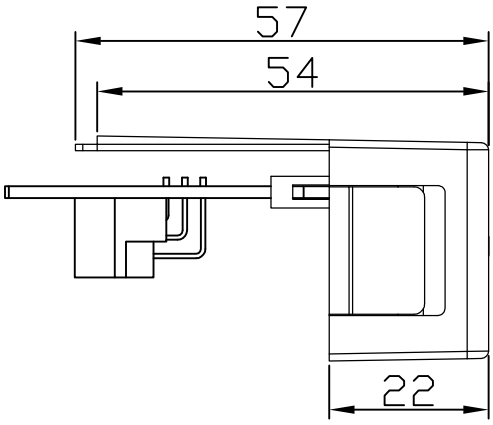

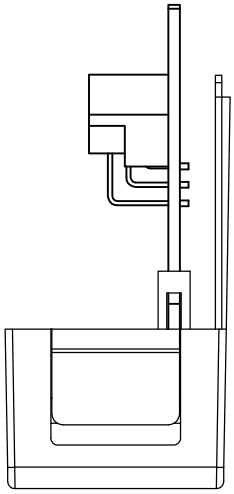

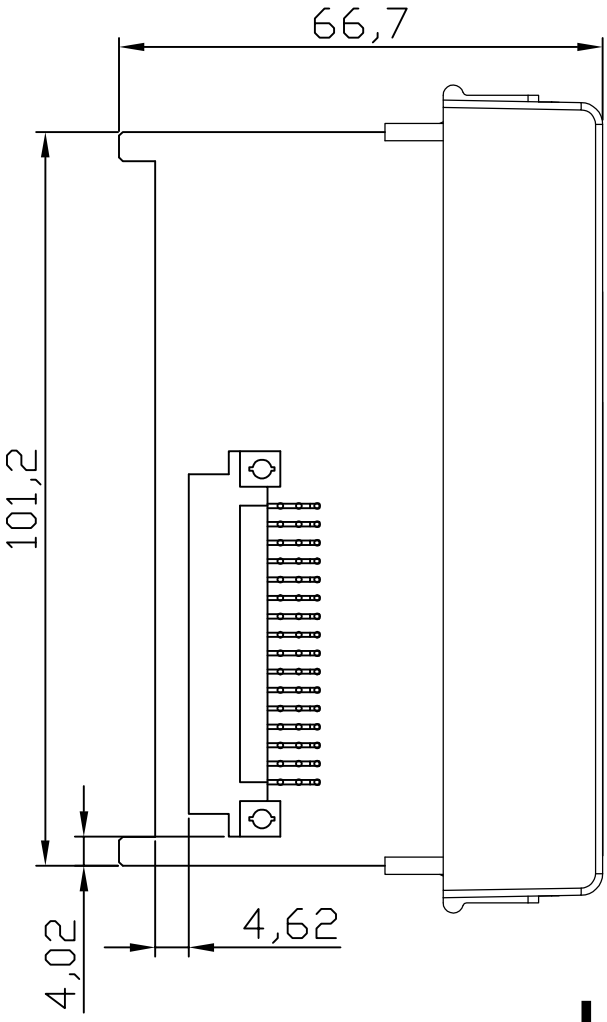

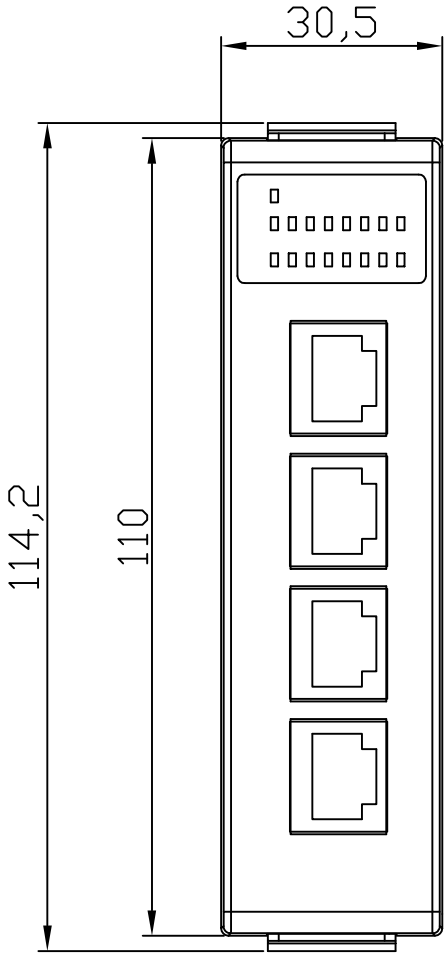

Unit: mm