Selection Guide

ISA bus isolated data acquisition board

Model No.		ISO-AD32H/L	ISO-813	ISO-LDH/L	ISO-DA8	ISO-DA16
Bus		AT				
Analog Input Channels		32 S.E. 16 DIF	32 S.E.	1	-	-
Strain Gauge Input		-	-	1	-	-
Analog Input Resolution		12-bit			-	-
Analog Input Range (V)	Bipolar Low Gain	10,±5,±2.5, 1.25,±0.625	±10,± 5,±2.5, 1.25, 0.625, ±0.3125	-	-	-
	Bipolar High Gain	±10,±5,±1, ±0.5,±0.1 0.05,±0.01,±0.005	-	-	-	-
	Unipolar Low Gain	0~10,0~5,0~2.5, 0~1.25	0~10,0~5,0~2.5, 0~1.25,0~0.625	0~10,0~5,0~2.5 0~1.25	-	-
	Unipolar High Gain	0~10,0~1,0~0.1, 0~0.01	-	0~10,0~1, 0~0.1,0.01	-	-
Analog Output	Channels	-	-	-	8	16
	Resolution	-	-	-	14-bit	
	Range (V)	-	-	-	±10,±5, 0~5,0~10	
	Range (mA)	-	-	-	0~20,4~20	
On-Board FIFO		1K bytes	-	1K bytes	-	-
Speed		200KHz	10KHz	16KHz	-	-
Digital I/O Channels		-	-	8 isolated input 7 isolated O.C. output 8 TTL Output	16 TTL Input 16 TTL Output	16 TTL Input 16 TTL Output
Channel Scan		Yes	-	-	-	-
Dimensions (mm)		173 x 122	174 x 122	190 x 122	182 x 122	
Page		3-2	3-6	3-4	3-7	

Isolated Digital I/O, Relay Output Board Selection Guide

Model NO.	ISO-P32C32	ISO-C64	ISO-P64	ISO-730	P8R8DIO	P16R16DIO
Bus	AT					
Isolated Input Channels	32	-	64	16	8	16
Input Range	5~30V	-	5~30V	5~30V	5~24V	5~24V
Isolated Output Channels	32	64	-	16	8	16
Driving Capacity	Open-collector 100 mA sink	Open-collector 100 mA sink		Open-collector 100 mA sink 200 mA max.	Relay 125VAC@0.5A 30VDC@1A	
Non-isolated DI/O	-	-	-	16DI 16DO	-	-
Other Function	Built-in DC/DC	On Board Fuse , LED	Built-in DC/DC	Built-in DC/DC	4 Form C relay 4 Form A relay	8 Form C relay 8 Form A relay
Connectors	1 x 40-pin 1 x DB-37			4 x 20-pin 1 x DB-37	1 x DB-37	1 x 40-pin 1 x DB-37
Daughter Board	DB-37,DN-37,DB-8125			DB-37,DN-37, DB-8125,DB-8025	DB-37,DN-37,DB-8125	
Dimensions (mm)	163 x 115			172 x 124	157 x 105	175 x 121
Page	3-9			3-11	3-12	

ISO-AD32

32-channel 12-bit 200KS/s isolated analog input board

Features

- 32 single-ended or 16 differential input channels
- 500VDC photo-isolation protection
- 12-bit resolution
- Maximum 200KHz sampling rate
- Built-in 1K bytes FIFOs
- Single-ended or differential input selectable
- Auto channel scan / gain scan
- Command set programming
- Gap-free A/D conversion

Functional Description

The ISO-AD32H/L (H for high gain; L for low gain) is a bus-type isolated 12-bit A/D board for PC/AT compatible computers. The isolation inputs can operate up to 500Vrms of common-mode voltage.
The ISO-AD32H/L features a 200KHz 12-bit analog-to-digital converter, on board 1 K bytes FIFO buffer, 32 single-ended or 16 differential analog input channels.
The analog input allows auto-channel /gain scan. This board supports gap-free A/D conversion at 200KHz sampling rates for single channel or 100KHz sampling rates for channel scanning.

The "Hands-Off" design permits all board parameters (channel selection, gain, input type, operating mode) to be performed in software. Once installed, user will never have to worry again.
The innovative design improve several drawbacks of the conventional isolated A/D card. Such as:

1. The speed is faster; up to 200KHz
2. The sampling rate can be programmable
3. On board FIFOs buffer support gap-free A/D conversion and work well under DOS and Windows environment
4. High channel count input can be implemented in half size board.

Applications

- Data acquisition
- Waveform analysis
- Harsh environment operation
- Signal isolation

Specifications

Analog Input

- Number of channels: 32 single-ended/16 differential
- Resolution: 12-bit
- Conversion rate: 200KS/s max
- Input impedance: 10,000MΩ II 6pF
- Over voltage protection: ±35V
- Accuracy: 0.01% of reading ±1 bit
- Linearity: ±1 bit
- On chip sample & hold
- Zero drift: ±25ppm/ °C of F.S. max

ISO-AD32H Input Range

Gain	Bipolar(V)	Unipolar(V)	Throughput
0.5	±10	X	125K/s
1	±5	0~10	125K/s
5	±1	X	80K/s
10	±0.5	0~1	80K/s
50	±0.1	X	10K/s
100	±0.05	0~0.1	10K/s
500	±0.01	X	1K/s
1000	±0.005	0~0.01	1K/s

ISO-AD32L Input Range

Gain	Bipolar(V)	Unipolar(V)	Throughput
0.5	±10	X	200K/s
1	±5	0~10	200K/s
2	±2.5	0~5	200K/s
4	±1.25	0~2.5	200K/s
8	±0.625	0~1.25	200K/s

ISO-AD32

32-channel 12-bit 200KS/s isolated analog input board

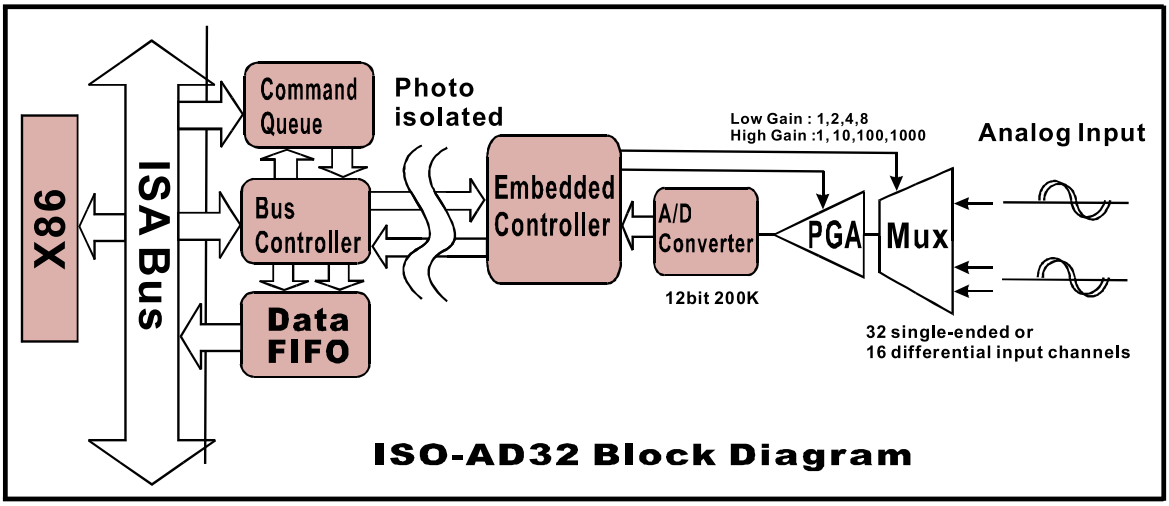

ISO-AD32 Block Diagram

General Specifications

- I/O connector: one 37-pin D-Sub female
- Power requirements: +5V @ 850 mA
- Operating temperature: 0 ~ 60°C
- Operating humidity: 0 ~ 90% non-condensing
- Storage temperature: -20 ~ 70°C
- Dimensions: 173 mm x 122 mm

Pin Assignment

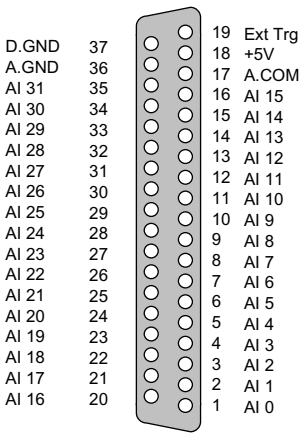

Ordering Information

Standard

ISO-AD32H: 32-channel 12-bit 200 KHz high gain isolated analog input board
ISO-AD32H/S: ISO-AD32H with DN-37
ISO-AD32L: 32-channel 12-bit 200 KHz high gain isolated analog input board
ISO-AD32L/S: ISO-AD32H with DN-37

Optional

DN-37: 2x37-pin connector DIN-rail mounting terminal board
DB-1825: General screw terminal board
DB-37: 37-pin D-sub directly connector terminal board

ISO-LDH/L

Isolated strain gauge type Load Cell input board

Features

- 500 VDC photo-isolation protection
- One strain gauge input channel
- One analog input channel
- Built-in 1K bytes FIFOs
- Excitation voltage for Load Cell:12V, 50 mA
- Maximum gain up to 40,000
- Programmable 12-bit resolution DC offset voltage
- Second order low-pass filter build-in
- Direct connection to strain gauge type Load Cell
- 8-channel 12-24V isolated digital input
- 7-channel isolated open-collector digital output
- Programmable 8-bit LED indicator
- Command set programming

Functional Description

The ISO-LD series is a bus-isolated Load Cell input board. The isolation inputs can operate with up to 500Vrms of common-mode voltage. The ISO-LD series features a 12-bit analog-to-digital converters, on board 1 K bytes FIFO buffer, one Load Cell signal input channel, one analog input channel, 8-channel 12-24V isolated digital inputs, 7-channel isolated open-collector digital outputs, one programmable 8-bit LED indicator to indicate the magnitude of strain gauge input signal. The ISO-LD series board is suitable for static force measurement and dynamic force analysis. Because there are on-board excitation voltage, high-gain amplifier, user don't have to buy any excitation voltage and signal conditioning module.

The board also has some special features, such as:

1. 12-bit programmable offset voltage. Therefore the user can cancel the DC bias and amplify the AC signal
2. The isolated structure eliminate the ground loop noise and protect your computer
3. On board 1K FIFOs buffer support gap-free A/D conversion under DOS and Windows environment
4. Except the Load Cell input channel, there are a lot digital I/O and one analog input channel. The user can ues ISO-LD to implement a measurement and analysis system.

Applications

- Strain Gauge type Load Cell measurement
- Dynamic force on-line monitoring system
- Dynamic pressure measurement

Specifications

Analog Input

- Number of channels: 1 Load Cell input channel & 1 analog input channel
- Resolution: 12-bit
- Conversion rate: 20 KS/s max
- Input Impedance: 10,000MΩ || 6pF
- Bias Current: ±3 nA max
- Input offset current: ±2 nA max
- CMRR: 90 dB min
- Recommended warm-up time: 10 minutes
- On chip sample & hold

ISO-LDH Input Range

- Analog input range: 0~10V, 0~1V, 0~0.1V, 0~0.01V
- Strain Gauge input range: 0~37.5 mV

Gain	Input range(mV)
400	0~37.5
4,000	0~15
40,000	0~12.75

ISO-LDL Input Range

- Analog input range: 0~10V, 0~5V, 0~2.5V, 0~1.25V
- Strain Gauge input range: 0~37.5 mV

Gain	Input range(mV)
400	0~37.5
8,00	0~25
1,600	0~18.75
3,200	0~15.625

- Load Cell offset voltage adjustment: 0~ -5V, 12-bit

ISO-LDH/LDL

Isolated strain gauge type Load Cell input board

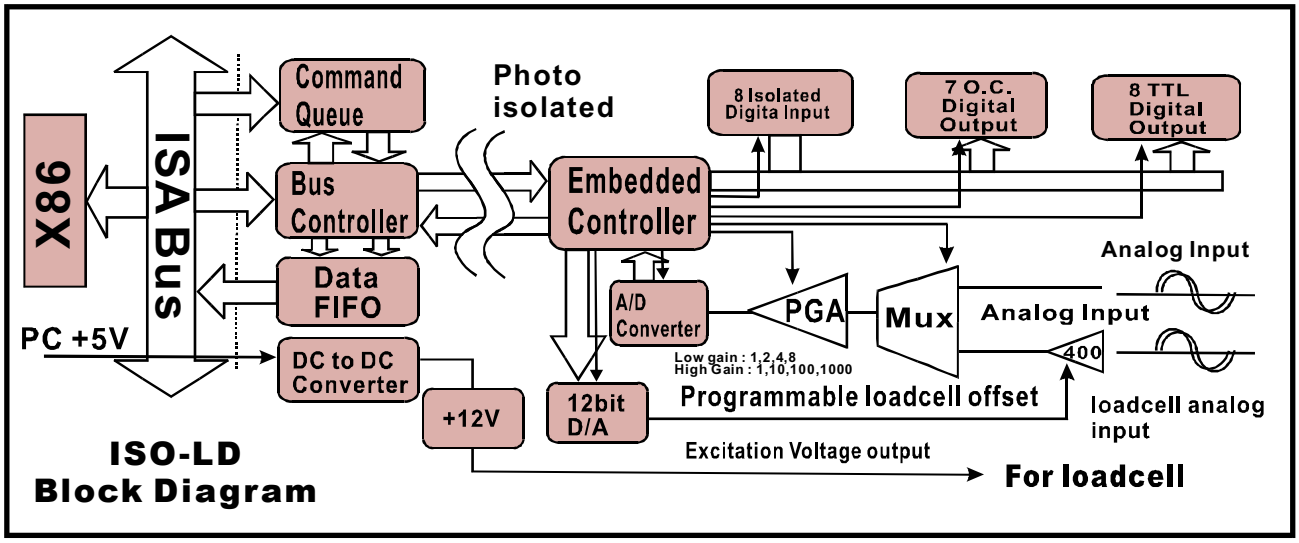

Digital I/O

- 8 photo-isolated 12~24V digital input
- 7 isolated open-collector digital output (NPN type)
- Sink current:100 mA
- 8 TTL/LED output

General Specifications

- I/O connector:
  one 9-pin D-Sub female
  one 25-pin D-Sub female
  one 10-pin ribbon male
- Power requirements: +5V @ 400 mA
- Operating temperature: 0 ~ 60°C
- Operating humidity: 0 ~ 90% non-condensing
- Storage temperature: -20 ~ 70°C
- Dimensions: 182 mm x 122 mm

Ordering Information

Standard

ISO-LDH:	12-bit high-gain Load Cell input board
ISO-LDH/S:	ISO-LDH with DN-25
ISO-LDL:	12-bit low-gain Load Cell input board
ISO-LDL/S:	ISO-LDL with DN-25

Optional

DN-25:	DIN-rail mounting terminal board
S-50:	S-type Load Cell

Pin Assignment

CN1

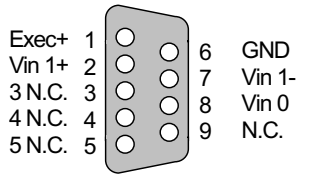

CN2

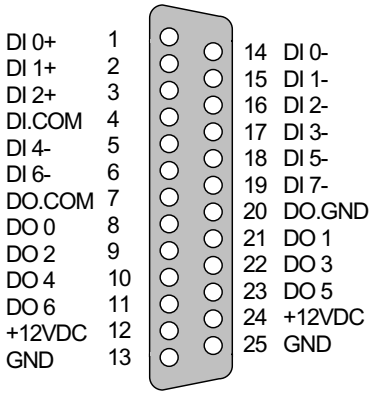

CN3

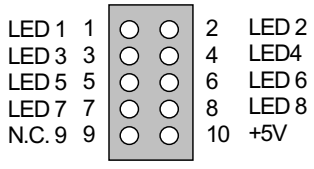

ISO-813

32-channel 12-bit 10KS/s isolated analog input board

Features

- 32 single-ended analog input channels
- 12-bit A/D converter (ADS 774 or equivalent)
- 3,000VDC photo-isolation protection
- Analog input range
  Bipolar : +/- 10V,+/- 5V, +/-2.5V, +/-1.25V, +/-0.625V, +/-0.3125V
  Unipolar: 0-10V, 0-5V, 0-2.5V, 0-1.25V, 0-0.625V
- Programmable gain control:1, 2, 4, 8, 16
- Built-in3000V DC/DC converter
- A/D trigger mode: software trigger
- A/D data transfer mode : polling

Functional Description

The ISO-813 is a bus-isolated 12-bit A/D board for PC/AT compatible computers. Its isolation range is increased to 3000 V that extend the application field to real industry application. It is backward compatible to 813 families. When compared with PCL-813 or ACL-8113, the ISO-813 adds x16 Programmable Gain Control range . On-board FPGA increase the stability of this board. It is the most cost effective isolated A/D board in the world. If the user need high sampling rate, differential input and FIFOs-on-board isolated A/D card, please refer to our ISO-AD32.

Applications

- Data acquisition
- Harsh environment operation
- Signal isolation

Specifications

Analog Input

- Number of channels: 32 single-ended
- Resolution: 12-bit
- Conversion rate: 10KS/s max
- Input impedance: 10MΩ
- Over voltage protection: ±35V
- Accuracy: 0.01% of reading ±1 bit
- Linearity: ±1 bit
- On chip sample & hold
- Zero drift: ±25ppm/ °C of FS max

General Specifications

- I/O connector: one 37-pin D-Sub female
- Power requirements: +5V @ 850 mA max
- Operating temperature: 0 ~ 60°C
- Operating humidity: 0 ~ 90% non-condensing
- Storage temperature: -20 ~ 70°C
- Dimensions: 174 mm x 122 mm

Pin Assignment

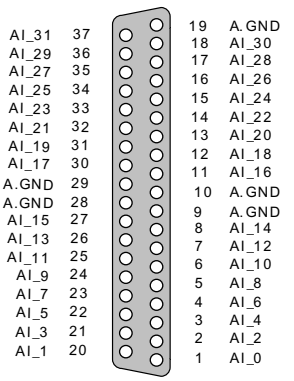

Ordering Information

Standard

ISO-813: 32-channel 12-bit 10KS/s isolated analog input board

ISO-813/S: ISO-813 with DB-8325

Optional

DB-8325: Daughter board with signal conditioning circuitry

DB-37: Directly connection terminal board

DN-37: DIN-rail mounting terminal board

ISO-DA8/DA16

14-bit 8/16-channel isolated analog output board

ISO-DA8

ISO-DA16

Features

- 2500VDC photo-isolation protection
- 8/16-channel, 14-bit analog output
- Unipolar or bipolar outputs available from each converter
- Voltage/Current output from each converter
- Output type and output range can be software programmable
- 4~20 mA or 0~20 mA current sink to ground from each converter
- Double-buffered D/A latches
- Command set programming
- Software Calibration
- 16-channel DI, 16-channel DO

Functional Description

The ISO-DA8/16 is a bus isolated 14-bit D/A card for PC/AT compatible computers. The optical isolation of the ISO-DA8/16 can operate with up to 2500Vrms of common-mode. The ISO-DA8/16 offers 8/16 channel double-buffered analog outputs. The output range can be configured in different ranges: ±10V,±5V, 0~10V, 0~5V voltage output or 4 to 20 mA or 0 to 20 mA sinkcurrent.

The innovative design improve several drawbacks of the conventional isolated D/A card. For example :

1. Jumperless and trimless
2. The power-on value of analog output can be pre-defined by the user and stored in the on-board EEPROM
3. The calibration is performed under software control, thus eliminating manual trim-pot adjustments. The calibration data is stored in EEPROM. Easy recalibration ensures the accuracy of the board
4. Every channel can be selected as voltage or current output
5. High channel count output can be implemented in half size.

Applications

- Programmable voltage source
- Programmable current sink
- Harsh environment operation
- Process control

Specifications

Analog Output

- D/A converter: Quad 14-bit MDAC
- Channels: 8/16 independent
- Resolution: 14-bit
- Type: double-buffered, multiplying
- Integral linearity: 0.006% FSR (typical)
- Differential linearity: 0.006 % FSR (typical)

Voltage Output Range

- Unipolar: 0~5V or 0~10V
- Bipolar: ±10V or ±5V
- Current drive: ±5 mA
- Absolute accuracy: 0.01% FSR (typical)
- Power on state: programmable

Current Output Range

- 0~20 mA or 4~20 mA
- Absolute Accuracy: 0.1% FSR (typical)
- Excitation voltage range: + 7V ~ +40V
- Power on state: programmable

Digital I/O

- 16 TTL-level input
- Input low V_{IL} = 0.8V max; I_{IL} =-0.4 mA max
- Input high V_{IH} = 2.0V min; I_{IH} = 20 μ A max
- 16 TTL-level output
- Output low V_{OL} = 0.5V max; @I_{OL} =8 mA max
- Output high V_{OH} = 2.7V min; @I_{OH} =0.4 mA max

Stability

- Offset temperature coefficient: ±50 μ V/°C
- Gain temperature coefficient: ±10ppm/°C

ISO-DA8/DA16

14-bit 8/16-channel isolated analog output board

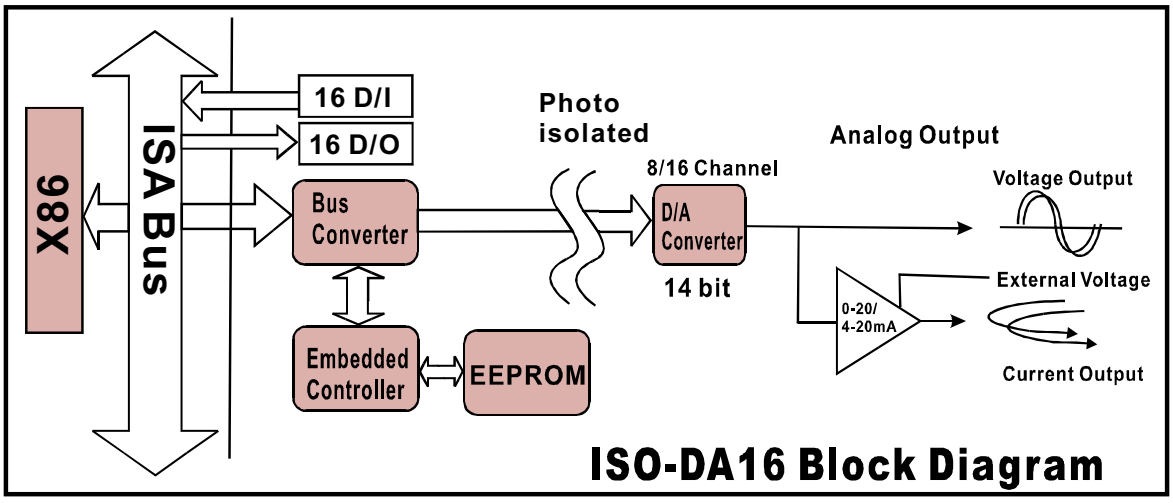

ISO-DA16 Block Diagram

General Specifications

- I/O connector:
  one 37-pin D-Sub female
  two 20-pin ribbon male
- Power requirements:
  ISO-DA8: +5VDC @ 800 mA max
  ISO-DA16: +5VDC @ 1400 mA max
- Operating temperature: 0 ~ 60°C
- Operating humidity: 0 ~ 90% non-condensing
- Storage temperature: -20 ~ 70°C
- Dimensions: 182 mm x 122 mm

CN3

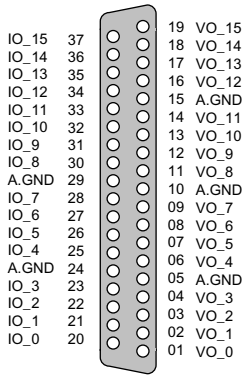

Pin Assignment

CN1

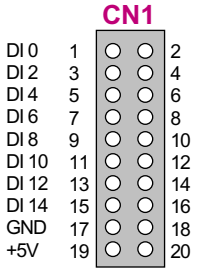

CN2

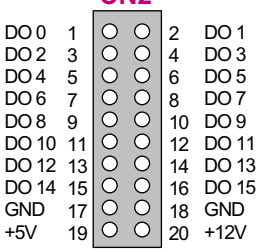

Ordering Information

Standard

ISO-DA8: 8-channel 14-bit isolated analog output board
ISO-DA8/S: ISO-DA8 with DN-37
SO-DA16: 16-channel 14-bit isolated analog output board
ISO-DA16/S: ISO-DA16 with DN-37

Optional

DN-37: DIN-rail mounting terminal board
DB-37: Directly connection terminal board
DB-16P: 16-channel OPTO-Isolated digital input board
DB-16R: 16-channel relay output board
DN-20: DIN-rail mounting terminal board
ADP-20/PCI: 20-pin extender

ISO-P32C32/P64/C64

64-channel isolated DI/O board

ISO-P32C32

Features

- 32-channel isolated digital input & 32-channel isolated digital output (ISO-P32C32)
- 64-channel isolated digital input (ISO-P64)
- 64-channel isolated digital output (ISO-C64)
- Sink current up to 100 mA on each isolated output
- Four isolated bank, 3000VDC isolation voltage
- DC/DC converter build-in (ISO-P32C32 & ISO-P64)
- Two interrupt source: channel 0 and channel 15 (ISO-P32C32)

Functional Description

The ISO-P32C32/P64/C64 provide 64 optically isolated digital input and/or output channel, arranged into four isolated banks. Each input channel use a photo-coupler input which allows either internal isolated power supply or external power selected by jumper. Each digital output offers a Darlington transistor and integral suppression diode for inductive load. The power supply of the input port may use the external power or the power from the PC side using DC/DC converter. The power supply of the output port should use the external power. This interface board is easily installed in any PC/AT. The board interface to field logic signals, eliminating ground loop problems and isolating the host computer from damaging voltages. The ISO-P32C32/P64/C64 has one 37-pin D-Sub connector and one 40-pin male header. The 40-pin to DB-37 flat-cable is used to fixed with the case. The user can connect the digital signal through the second D-Sub connector.

Applications

- Factory Automation
- Product Test
- Laboratory Automation

Specifications

Isolated Digital Output

- Number of channels: 32 (ISO-P32C32)
  64 (ISO-C64)
- Type: Isolated open-collector (NPN type)
- Sink current: 100 mA per channel
- External voltage: 30V max
- Response time: 30KHz max

Isolated Digital Input

- Number of channels: 32 (ISO-P32C32)
  64 (ISO-P64)
- Type: Isolated current input
- Isolation voltage:
  3750V (using external power)
  3000V (using internal power)
- Input voltage: 5V to 30V
- Input impedance: 3KΩ; 1/4W
- Response time: 4KHz max

General Specifications

- I/O connector:
  one 37-pin D-Sub female & one 40-pin header
- Power requirements:
  +5V @ 600 mA (ISO-P32C32)
  +5V @ 400 mA (ISO-P64)
  +5V @ 800 mA (ISO-C64)
- Operating temperature: 0 ~ 60°C
- Operating humidity: 0 ~ 90% non-condensing
- Storage temperature: -20 ~ 70°C
- Dimensions: 163 mm x 115 mm

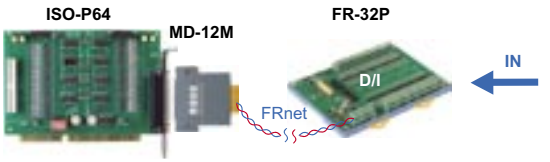

FRnet (two-wire cable; can be up to 400 m)

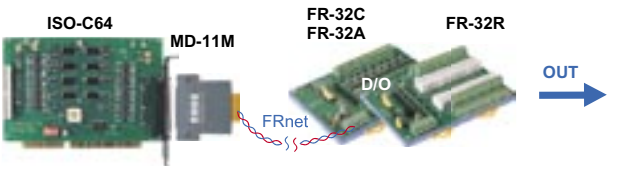

FRnet (two-wire cable; can be up to 400 m)

Please refer to page 8-7 MagicWire and FR I/O for detail information

ISO-P32C32/P64/C64

64-channel isolated DI/O board

ISO-P64

ISO-C64

Pin Assignment

ISO-P32C32

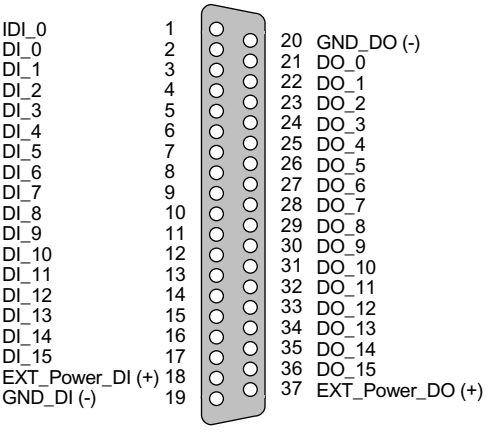

ISO-C64

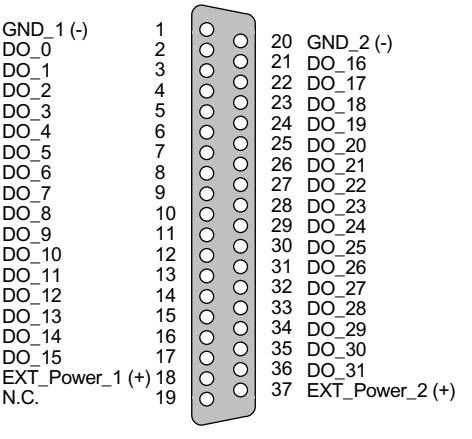

ISO-P64

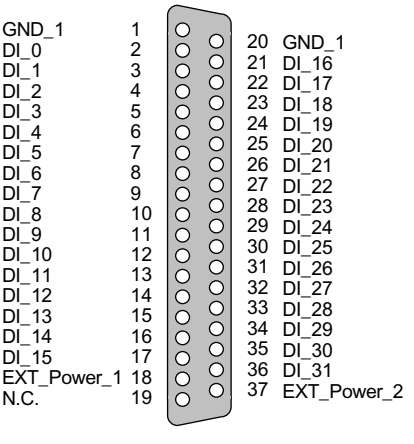

Ordering Information

Standard

ISO-P32C32:	32-channel isolated digital input and 32-channel isolated open-collector output board
ISO-P64:	64-channel isolated digital input board
ISO-C64:	64-channel isolated digital output board

Optional

DN-37:	2x37-pin connector DIN-rail mounting terminal board
DB-37:	37-pin D-sub directly connector terminal board
DB-16P16R:	16-channel of input terminal and 16-channel of relay output daughter board (For ISO-P32C32)
DB-32R:	32-channel of relay output daughter board (For ISO-C64)

ISO-730

32-channel isolated DI/O & 32-channel TTL DI/O board

Features

- 16 isolated digital inputs,16 isolated open-collector output
- 16 TTL input and 16 TTL output
- Sink current up to 200 mA on each isolated output
- Built-in DC/DC converter
- 2500VDC isolation voltage
- Two interrupt source:
  - Channel 0 and 1 of isolated DI port
  - Channel 0 and 1 of TTL DI port

Functional Description

The ISO-730 has 32 isolated digital I/O channels and 32 TTL digital I/O channels. Each of the 16 isolated digital input channel accepts voltage from 5V to 24V and has a resistance of 1.2KΩ. Each of the 16 isolated digital output channels equipped a Darlington transistor. The board can interface to field logic signals to eliminate ground-loop problems and isolate the host computer from damaging voltages. It is compatible to PCL-730.

Applications

- Factory Automation
- Product Test
- Laboratory Automation

Specifications

16 Optical-Isolated Inputs

- Type: Isolated current input
- Isolation voltage: 2500VDC
- Input voltage: 5V to 30VDC
- Input impedance: 1.2KΩ, 0.5W
- Response time: 10KHz max

16 TTL-level Inputs

- Input high voltage: 2.0V min
- Input low voltage: 0.8V max
- Input load: High: 0.05 mA max @ 2.7V
  Low: 0.4 mA max @ 0.5V
- Response time :30KHz typical

16 Optical-Isolated Outputs

- Output voltage: open collector 30V max
- Isolation voltage: 2,500VDC
- Sink current: 100 mA/channel
- Response time: 10KHz max

16 TTL-level Outputs

- High: Source 0.4 mA at 2.4V min
- Low: Sink 8 mA at 0.5V max

General Environmental

- I/O connector: one 37-pin D-Sub female
  four 20-pin ribbon male
- Power requirements: +5V @ 764 mA
- Operating temperature: 0 ~ 60°C
- Operating humidity: 0 ~ 90% non-condensing
- Storage temperature: -20 ~ 70°C
- Dimensions: 172 mm x 124 mm

Pin Assignment

CN3

DO 0	1	2	DO 1
DO 2	3	4	DO 3
DO 4	5	6	DO 5
DO 6	7	8	DO 7
DO 8	9	10	DO 9
DO10	11	12	DO 11
DO12	13	14	DO 13
DO14	15	16	DO15
D.GND	17	18	D.GND
+5V	19	20	+12V

CN4

DI 0	1	2	DI 1
DI 2	3	4	DI 3
DI 4	5	6	DI 5
DI 6	7	8	DI 7
DI 8	9	10	DI 9
DI 10	11	12	DI 11
DI 12	13	14	DI 13
DI 14	15	16	DI 15
D.GND	17	18	D.GND
+5V	19	20	+12V

CN6

IDI_0	1	20	IDI_1
IDI_2	2	21	IDI_3
IDI_4	3	22	IDI_5
IDI_6	4	23	IDI_7
IDI_8	5	24	IDI_9
IDI_10	6	25	IDI_11
IDI_12	7	26	IDI_13
IDI_14	8	27	IDI_15
E1.COM1	9	28	E1.COM2
E0.COM1	10	29	EO.GND
IDO_0	11	30	IDO_1
IDO_2	12	31	IDO_3
IDO_4	13	32	IDO_5
IDO_6	14	33	IDO_7
IDO_8	15	34	IDO_9
IDO_10	16	35	IDO_11
IDO_12	17	36	IDO_13
IDO_14	18	37	IDO_15
E0.COM2	19		

Ordering Information

Standard

ISO-730: 32-channel isolated digital I/O & 32-channel TTL digital I/O board

Optional

DN-37: Two 37-pin connector DIN-rail mounting terminal board
DB-37: 37-pin D-sub directly connector terminal board
DN-20: Two 20-pin header DIN-rail terminal board
DB-16P: 16-channel isolated D/I board
DB-16R: 16-channel relay board
ADP-20: 20-pin extender

P8R8DIO/P16R16DIO

8/16-channel isolated digital input & 8/16-channel relay output board

P8R8DIO

P16R16DIO

Features

- 8/16-channel electromagnetic relay output
- 8/16-channel optically isolated digital input
- AC/DC signal input
- AC signal input with filter
- On-board LED indication for relay status

Functional Description

The P8R8DIO is an 8-channel isolated digital input and 8 channel relay output interface board designed for control and sensing applications. This board is easily installed in any PC/AT/XT or compatible computer. The P8R8DIO can be used in various applications including load switching, external switching, contact closure and others. The P16R16DIO has one 37-pin D-Sub female and one 40-pin header. It can replace two P8R8DIO.

Applications

- Factory Automation
- Product Test
- Laboratory Automation
- Security Control

Specifications

Relay Output

- Relay output channels: 8(P8R8DIO); 16(P16R16DIO)
- Contact rating: 125VAC@0.5A ; 30VDC@1A
- Output type: channel 0~3 and 8~11: SPDT(Form C)
  channel 4~7 and 12~15: SPST(Form A)
- Breakdown voltage: 1KV
- Operating time: 5ms
- Release time: 5ms
- Expected life > 100, 000 times (Electrical at 30V/1A)

Isolated Digital Input

- Number of channels: 8 (P8R8DIO);16(P16R16DIO)
- Type: non-polarized OPTO-Isolated
- Input voltage: AC/DC 5-24V (AC: 50 -1 K Hz)
- Input impedance: 1.2 KΩ
- Response time: 20 μS (without filter)
  2.2 mS (with filter)
- Isolation voltage: 500V Channel-Channel & Channel-Ground

General Specifications

- I/O connector:
  one 37-pin D-sub female (P8R8DIO)
  one 37-pin D-sub female & one of 40-pin header (P16R16DIO)
- Power requirements: (max)

Device	+5V	+12V
P8R8DIO	120 mA	180 mA
P16R16DIO	200 mA	260 mA

- Operating temperature: 0 ~ 60°C
- Operating humidity: 0 ~ 90% non-condensing
- Storage temperature: -20 ~ 70°C
- Dimensions: 145 mm x 105 mm (P8R8DIO)
  175 mm x 121 mm (P16R16DIO)

Pin Assignment

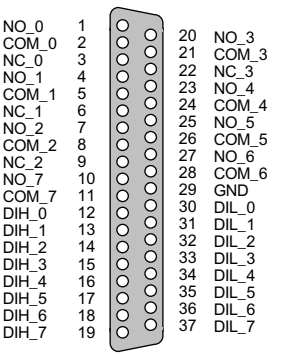

Ordering Information

Standard

P8R8DIO: 8-channel isolated digital input 8-channel relay output board

P16R16DIO: 16-channel isolated digital input 16-channel relay output board

Optional

DN-37: Two 37-pin connector DIN-rail mounting terminal board

DB-37: 37-pin D-sub directly connector terminal board

Selection Guide

ISA bus Non-isolated data acquisition board

Model No.		A-826PG	A-822PG	A-823PG	A-821PG	A-812PG	A-8111	A-626/628
Bus		AT						
Analog Input Channels		16 S.E. 8 DIF.				16 S.E.	8 S.E.	-
Anaolg Input Resolution		16-bit	12-bit					-
Analog Input Range (V)	Bipolar Low Gain	±10,±5,±2.5, ±1.25	±10,±5,±2.5,±1.25,±0.625		±5,±2.5,±1.25, ±0.625	±10,±5,±2.5,±1.25,±0.625,±0.3125	±5,±2.5,±1.25, ±0.625,±0.3125	-
	Bipolar High Gain	-	±10,±5,±1,±0.5,±0.1,±0.05 ±0.01,±0.005		±5,±0.5,±0.05, ±0.005	-	-	-
	Unipolar Low Gain	-	0~10,0~5,0~2.5,0~1.25		-	-	-	-
	Unipolar High Gain	-	0~10,0~1,0~0.1,0~0.01		-	-	-	-
Analog Output	Channels	2	2	2	1	2	1	6/8
	Resoluti	12-bit						
	Range (V)	0~5 0~10	0~5 0~10	0~5,0~10 ±5, ±10	0~5 0~10	0~5 0~10	0~5 0~10	0~5,0~10 ±5, ±10
	Range (mA)	-	-	-	-	-	-	4-20 mA
Speed		100KHz	125KHz	125KHz	45KHz	62.5KHz	30KHz	-
Digital I/O Channels		16 Input 16 Output	16 Input 16 Output	16 Input 16 Output	16 Input 16 Output	16 Input 16 Output	16 Input 16 Output	16 Input 16 Output
Dimensions (mm)		170 x 122	170 x 122		170 x 122	163 x 124	157 x 106	184 x 123 (A-626) 198 x 123 (A-628)
Page		3-14	3-16		3-18	3-20	3-21	3-22

ISA Bus Digital I/O, Counter/Timer Board Selection Guide

Model No.	DIO-24	DIO-48	DIO-64	DIO-96	DIO-144	TMC-10
Bus	AT					
Digital I/O Channels	24 Bi-direction	48 Bi-direction	32 DI 32 DO	96 Bi-direction	144 Bi-direction	-
Driving Capacity	24 mA sink 15 mA source	24 mA sink 15 mA source	24 mA sink 15 mA source	24 mA sink 15 mA source	24 mA sink 15 mA source	24 mA sink 15 mA source
Timer/ Counter	-	1 x 16-bit 1 x 32-bit	3 x 16-bit(DIO-64/3) 6 x 16-bit(DIO-64/6)	-	-	8 x 16-bit 2 x 32-bit
Connector	1 x 50-pin OPTO-22	2 x 50-pin OPTO-22	5 x 20-pin	4 x 50-pin OPTO-22	6 x 50-pin OPTO-22	1 x DB-37
Dimensions (mm)	107 x 106	182 x 110	93 x 135	182 x 110		121 x 106
Page	3-24		3-26	3-27		3-28

A-826PG

16-channel 16-bit 100KS/s multi-function board

Features

- 16-bit high resolution
- 100KS/s sampling rate
- 16 single-ended or 8 differential analog inputs
- A/D trigger mode: software trigger, pacer trigger, external trigger and event trigger
- A/D data transfer modes: polling, interrupt, DMA
- Software programmable gain: 1,2,4,8
- Bipolar analog input
- 2-channel of 12-bit D/A voltage output
- 16 digital inputs & 16 digital outputs
- General purpose programmable 16-bit counter/timer

Functional Description

The A-826PG is a multi-function, 16-bit high resolution Analog and Digital I/O board for the PC/AT compatible computers. The A-826PG offers 16-channel single-ended or 8-channel differential analog input, plus two channels of analog output with 12-bit resolution. In addition, the A-826PG has 16-channel digital input, 16-channel digital output and one timer/counter channel. The A-826PG uses a B.B. ADS 7805 high performance 16-bit A/D converter. It provides maximum sampling rate up to 100 K samples/s and software programmable gains DMA operation is jumper-selectable for levels 1 or 3. Interrupts are jumper-selectable between 3 and 15.

Applications

- Signal analysis
- Industrial automation
- Laboratory automation
- Sensor interface FFT & frequency analysis
- Transient analysis
- Production test
- Process control

Specifications

Analog Input

- Number of channels: 16 single-ended or 8 differential
- Resolution: 16-bit
- Conversion time: 8 μs
- Maximum sampling rate: 100KS/s
- Input impedance: 10,000 MΩ II 6pF
- Over voltage protection: ±35V
- Integral linearity error: ±3 LSB max
- On chip sample & hold
- Accuracy: 0.01% of reading ±1 bit
- Zero drift: ±15ppm/ °C of F.S. max

A-826PG Input Range

Gain	Bipolar(V)	Throughput
1	±10V	100KS/s
2	±5V	100KS/s
4	±2.5V	100KS/s
8	±1.25V	100KS/s

Analog Output

- Number of channels: 2 independent
- Type: 12-bit double buffered
- Linearity: 0.006% FS
- Output range: 0~5V, 0~10V or 0~Ext Ref
- External reference: +10V or -10V max
- Output driving: ±5 mA
- Settling time: 0.6 μs to 0.01% for full scale step

Digital I/O

- 16 TTL-level input
- Input low V_{IL} = 0.8V max; I_{IL} =-0.4 mA max
- Input high V_{IH} = 2.0V min; I_{IH} = 20 μA max
- 16 TTL-level output
- Output low V_{OL} = 0.5V max; @I_{OL} =8 mA max
- Output high V_{OH} = 2.7V min; @I_{OH} =0.4 mA max

Timer/Counter

- Number of channels: 1
- Resolution: 16-bit
- Compatibility: 5V/TTL
- Internal clock: 2MHz
- External clock: up to 10 MHz
- A/D pacer: cascaded 32-bit counter
- Programmable internal timer: 0.0047Hz~0.5MNz

A-826PG

16-channel 16-bit 100KS/s multi-function board

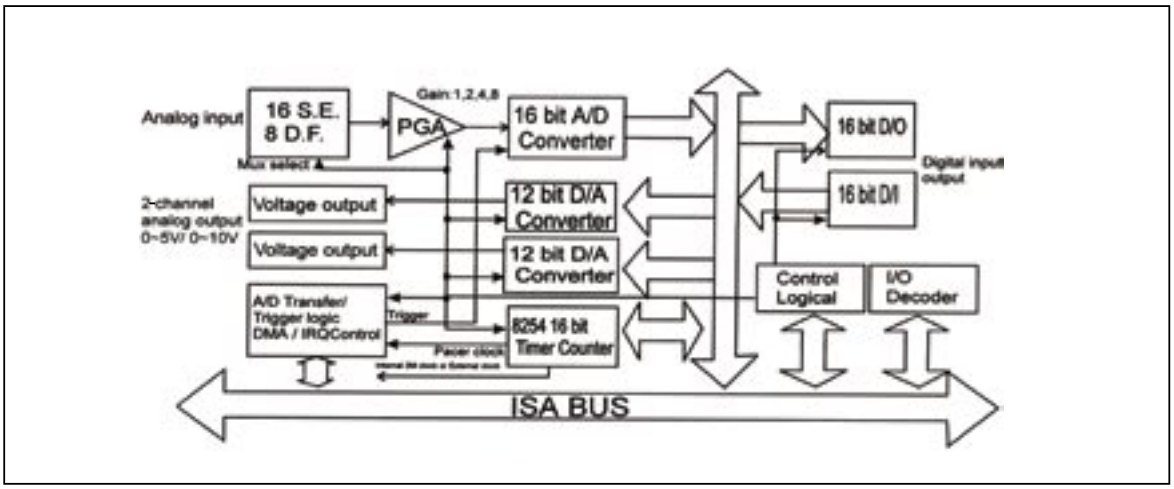

General Specifications

- I/O connector: one 37-pin D-Sub female
  two 20-pin ribbon male
- Power requirements: +5V @ 650 mA max
- Operating temperature: 0 ~ 60°C
- Operating humidity: 0 ~ 90 % non-condensing
- Storage temperature: -20 ~ 70°C
- Dimensions: 170 mm x 122 mm

CN2

DI 0	1	2	DI 1
DI 2	3	4	DI 3
DI 4	5	6	DI 5
DI 6	7	8	DI 7
DI 8	9	10	DI 9
DI 10	11	12	DI 11
DI 12	13	14	DI 13
DI 14	15	16	DI 15
D.GND	17	18	D.GND
+5V	19	20	+12V

CN3

DO 0	1	2	DO 1
DO 2	3	4	DO 3
DO 4	5	6	DO 5
DO 6	7	8	DO 7
DO 8	9	10	DO 9
DO 10	11	12	DO 11
DO 12	13	14	DO 13
DO 14	15	16	DO 15
D.GND	17	18	D.GND
+5V	19	20	+12V

Pin Assignment

CN1

Ext Counter	37	19	+5V OUT
N.C.	36	18	N.C.
COUT1	35	17	Ext Trig
CGATE1	34	16	COUT0
CGATE0	33	15	D.GND
D/A OUT1	32	14	A.GND
D/A Ref 0	31	13	+12V OUT
D/A OUT0	30	12	D/A Ref 1
A.GND	29	11	int Ref Out
A.GND	28	10	A.GND
AI15	27	09	A.GND
AI14	26	08	AI 7
AI13	25	07	AI 6
AI12	24	06	AI 5
AI11	23	05	AI 4
AI10	22	04	AI 3
AI 9	21	03	AI 2
AI 8	20	02	AI 1
		01	AI 0

Ordering Information

Standard

A-826PG: 16-channel 16-bit 100KS/s multi-function board

A-826PG/S: A-826PG with DB-8225

Optional

DB-8225: Screw terminal board with CJC

DB-889D: 16-channel multiplexer and signal conditioning board

DB-16P: 16-channel isolated digital input board

DB-16R: 16-channel relay board

DN-37: 2x37-pin connector DIN-rail mounting terminal board

DB-37: 37-pin D-sub directly connector terminal board

DN-20: 2x20-pin header DIN-rail terminal board

ADP-20: 120-pin extender

A-823PG/822PG

16-channel 12-bit 125KS/s multi-function boards

A-823PG

A-822PG

Features

- 12-bit A/D converter
- 125 KS/s sampling rates
- 16 single-ended or 8 differential analog inputs
- A/D Trigger modes: Software Trigger, Pacer Trigger, External Trigger and Event Trigger
- A/D data transfer modes: polling, interrupt, DMA
- Software programmable gain:
  PGH: 0.5, 1, 5, 10, 50, 100, 500,1000
  PGL: 0.5, 1, 2, 4, 8
- Bipolar and unipolar analog input
- Two 12-bit D/A Voltage output channels
- 16 digital inputs & 16 digital outputs
- 1-channel general purpose programmable 16-bit counter/timer

Functional Description

The A-823PGH/L and A-822PGH/L (H for high gain; L for low gain) are 12-bit multifunction analog and digital I/O boards for the PC/AT compatible computer. The A-823PG/A-822PG offers 16-channel single-ended or 8-channel differential analog inputs, plus two channels of analog output with 12-bit resolution. In addition, The A-823PG/A-822PG has 16-channel digital input, 16-channel digital output, and one channel timer/counter. Its sampling rate can reach 125K samples/second. The DMA operation is jumper-selectable for levels 1 or 3. Interrupts are jumper-selectable between 3 and 15. The A-823PG provides unipolar and bipolar D/A output, while the A-822PG provides only unipolar D/A output.

Applications

- Signal analysis
- Industrial automation
- Laboratory automation
- FFT & frequency analysis
- Transient analysis
- Production test
- Process control

Specifications

Analog Input

- Number of channels: 16 single-ended or 8 differential
- Resolution: 12-bit
- Conversion time: 8 μs
- Maximum sampling rate: 125KS/s
- Input impedance: 10,000 MΩ II 6pF
- Over voltage protection: $\pm$35V
- A/D converter: $\pm$1LSB max INL
- On chip sample & hold
- Accuracy: 0.01% of reading $\pm$1 bit
- Zero drift: $\pm$25ppm/ °C of FS max

PGH Input Range

Gain	Bipolar(V)	Unipolar(V)	Throughput
0.5	±10	X	125KS/s
1	±5	0~10	125KS/s
5	±1	X	80KS/s
10	±0.5	0~1	80KS/s
50	±0.1	X	10KS/s
100	±0.05	0~0.1	10KS/s
500	±0.01	X	1KS/s
1000	±0.005	0~0.01	1KS/s

PGL Input Range

Gain	Bipolar(V)	Unipolar(V)	Throughput
0.5	±10	X	125KS/s
1	±5	0~10	125KS/s
2	±2.5	0~5	125KS/s
4	±1.25	0~2.5	125KS/s
8	±0.625	0~1.25	125KS/s

Digital I/O

- 16 TTL-level input
- Input low V_{IL} = 0.8V max; I_{IL} =-0.4 mA max
- Input high V_{IH} = 2.0V min; I_{IH} = 20 μ A max
- 16 TTL-level output
- Output low V_{OL} = 0.5V max; @I_{OL} =8 mA max
- Output high V_{OH} = 2.7V min; @I_{OH} =0.4 mA max

A-823PG/822PG

16-channel 12-bit 125KS/s multi-function boards

Analog Output

- Number of channels: 2 independent
- Type: 12-bit double buffered
- Linearity: 0.006% FS
- Output range:
  Unipolar: 0~5V, 0~10V, 0~Ext Ref (A-822PG/823PG)
  Bipolar: ±5V, ±10V, ±Ext Ref (A-823PG)
- External reference: +10V or -10V max
- Output Driving: ±5 mA
- Settling time: 0.6 μ s to 0.01% for full scale step

Counter/Timer

- Number of channels: 1
- Resolution: 16-bit
- Compatibility: 5V/TTL
- Internal clock: 2MHz
- External clock: up to 10 MHz
- A/D Pacer: 16-bit counter (A-823PG)
  cascaded 32-bit counter (A-822PG)
- Programmable internal timer:
- 61Hz~1MHz (A-823PG)
- 0.0047Hz~0.5MHz (A-822PG)

General Specifications

- I/O connector: one 37-pin D-Sub female
  two 20-pin ribbon male
- Power requirements: +5V @ 960 mA max
- Operating temperature: 0 ~ 60°C
- Operating humidity: 0 ~ 90% non-condensing
- Storage temperature: -20 ~ 70°C
- Dimensions: 170 mm x 122 mm

Pin Assignment

CN1

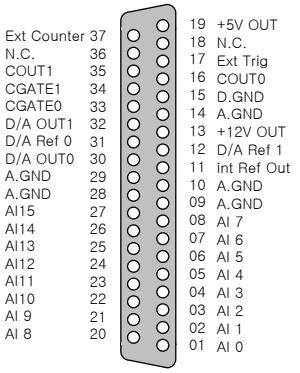

CN2

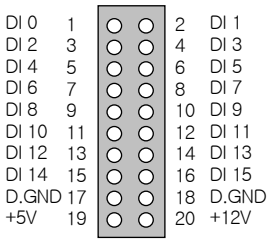

CN3

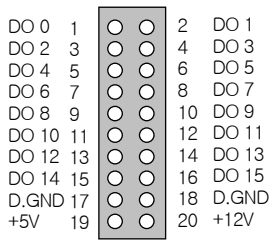

Ordering Information

Standard

A-823PGH: 16-channel 12-bit 125KS/s high gain multi-function board with 2x12-bit bipolar/unipolar analog output
A-823PGH/S: A-823PGH with DB-8225
A-823PGL: 16-channel 12-bit 125KS/s low gain multi-function board with 2x12-bit bipolar/unipolar analog output
A-823PGL/S: A-823PGL with DB-8225
A-822PGH: 16-channel 12-bit 125KS/s high gain multi-function board with 2x12-bit unipolar analog output
A-822PGH/S: A-822PGH with DB-8225
A-822PGL: 16-channel 12-bit 125KS/s low gain multi-function board with 2x12-bit unipolar analog output
A-822PGL/S: A-822PGL with DB-8225

Optional

DB-8225: Screw terminal board with CJC
DB-889D: 16-channel multiplexer and signal conditioning board
DN-37: 2x37-pin connector DIN-rail mounting terminal board
DB-37: 37-pin D-sub directly connector terminal board
DN-20: 2x20-pin header DIN-rail terminal board
DB-16P: 16-channel isolated D/I board
DB-16R: 16-channel relay board
ADP-20/PCI: 20-pin extender

A-821PG

16-channel 12-bit 45KS/s multi-function board

A-821PGH

A-821PGL

Features

- 12-bit A/D converter
- 45KS/s sampling rate
- 16 single-ended or 8 differential analog inputs
- A/D Trigger modes: Software Trigger, Pacer Trigger
- A/D data transfer modes: polling, interrupt
- Software programmable gain: 1, 10, 100, 1000 (A-821PGH);1, 2, 4, 8 (A-821PGL)
- Bipolar analog input
- One 12-bit analog output channel
- Interrupt handling
- 16 digital inputs & 16 digital outputs

Functional Description

The A-821PGH/L (H for high gain; L for low gain) are 12-bit multi-function analog and digital I/O boards for the PC/ AT compatible computer. The A-821PGH/A-821PGL offers 16-channel single-ended or 8-channel differential analog input, one channel analog output with 12-bit resolution, 16-channel digital input, 16-channel digital output. It has a maximum sampling rate of 45K samples/s.

Applications

- Laboratory automation
- Sensor interface
- Production test

Specifications

Analog Input

- Number of channels: 16 single-ended or 8 differential
- Resolution: 12-bit
- Conversion rate: 45KS/s max
- Input impedance: 10,000 MΩ II 6pF
- Over voltage protection: ±35V
- Accuracy: 0.01% of reading ±1 bit
- Zero drift: ±25ppm/ °C of F.S. max

PGL Input Range

Gain	Bipolar(V)	Throughput
1	±5V	45KS/s
2	±2.5V	45KS/s
4	±1.25V	45KS/s
8	±0.625V	45KS/s

PGH Input Range

Gain	Bipolar(V)	Throughput
1	±5V	45KS/s
10	±0.5V	45KS/s
100	±0.05V	10KS/s
1000	±0.005V	1KS/s

Analog Output

- Number of channels: 1 independent
- Type: 12-bit double-buffered (AD-7948)
- Linearity: ±1/2-bit
- Output range: 0~5V, 0~10V
- Output Driving: ±5 mA
- Settling time: 0.6 μ s to 0.01% for full scale step

Digital I/O

- 16 TTL-level input
- Input low V_{IL} = 0.8V max; I_{IL} =-0.4 mA max
- Input high V_{IH} = 2.0V min; I_{IH} = 20 μ A max
- 16 TTL-level output
- Output low V_{OL} = 0.5V max; @I_{OL} =8 mA max
- Output high V_{OH} = 2.7V min; @I_{OH} =0.4 mA max

Counter/Timer

- Number of channels: 1
- Resolution: 16-bit
- Compatibility: 5V/TTL
- Internal clock: 2MHz
- External clock: up to 10 MHz
- A/D pacer: cascaded 32-bit counter
- Programmable internal timer: 0.0047Hz~0.5MNz

A-821PG

16-channel 12-bit 45KS/s multi-function board

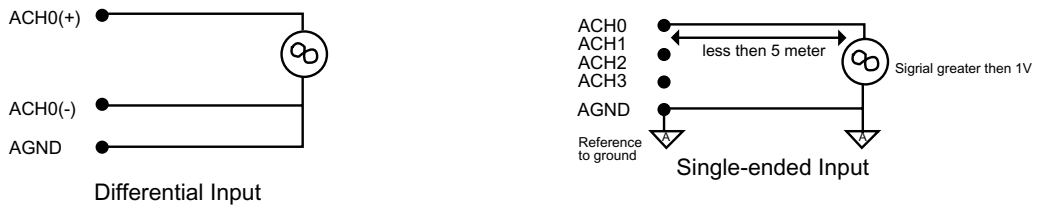

Single-ended & Differential Input

The A82X series provides 16-channel single-ended or 8-channel differential analog input. Single-ended inputs are all referenced to a common ground point. They are typically used when the input signal are greater than 1 volt, the lead wires from the signal source to the analog input hardware are short (less then 5 meter), and all input signals share a common ground reference. If above criteria do not meet, you should use differential inputs.
The common-mode noise can be canceled, when the input is configured in differential mode.

General Specifications

- I/O connector: one 37-pin D-Sub female
  two 20-pin ribbon male
- Power requirements:

Device	+5V	+12V	-12V
A-821PG	320 mA	60 mA	30 mA

- Operating temperature: 0 ~ 60°C
- Operating humidity: 0 ~ 90% non-condensing
- Storage temperature: -20 ~ 70°C
- Dimensions: 170 mm x 122 mm

Ordering Information

Standard

A-821PGH: 16-channel,12-bit 45KS/s high gain multi-function board
A-821PGH/S: A-821PGH with DB-8225
A-821PGL: 16-channel,12-bit 45KS/s low gain multi-function board
A-821PGL/S: A-821PGL with DB-8225
A-821PGL/DNA: A-821PGHL without D/A

Optional

DB-8225: Screw terminal board with CJC
DB-889D: 16-channel multiplexer and signal conditioning board
DN-37: 2x37-pin connector DIN-rail mounting terminal board
DB-37: 37-pin D-sub directly connector terminal board
DN-20: 2x20-pin header DIN-rail terminal board
DB-16P: 16-channel isolated D/I board
DB-16R: 16-channel relay board
ADP-20/PCI: 20-pin extender

Pin Assignment

CN1

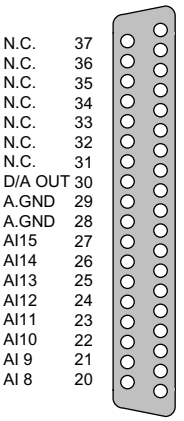

CN2

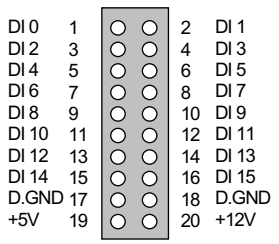

CN3

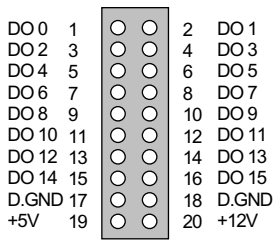

A-812PG

16-channel 12-bit 62.5KS/s Multi-Function board

Features

- 12-bit A/D converter
- 62.5KS/s sampling rate
- 16 single-ended analog inputs
- Software programmable gain: 1,2,4,8,16
- Bipolar analog input
- A/D Trigger modes : Software trigger, Pacer trigger, external trigger
- A/D data transfer modes : polling, interrupt DMA
- 16 digital inputs & 16 digital outputs
- Bipolar analog input
- Two 12-bit D/A voltage output
- One general purpose programmable timer/ counter

Functional Description

The A-812PG is a 12-bit multifunction analog and digital I/O board for the PC/AT compatible computer. The A-812PG offers 16-channel single-ended analog input and plus 2-channel analog output with 12-bit resolution. In addition, the A-812PG has 16-channel digital input, 16-channel digital output, and one timer/counter channel. The max. sampling rate of A-812PG is 62.5K samples/s. It is completely compatible to PCL-812PG.

Applications

- Laboratory automation
- Sensor interface

Specifications

Analog Input

- Number of channels: 16 single-ended
- Resolution: 12-bit
- Conversion rate: 62.5KS/s max
- Input impedance: 10 MΩ II 6pF
- Over voltage protection: ±35V
- Accuracy: 0.01% of reading, ±1 bit
- Linearity: ±1 bit
- On chip sample & hold
- Zero drift : ±25ppm/°C of FS max
- Input Range :
  ±10V, ±5V, ±2.5V, ±1.25V, ±0.625V, ±0.3125V

Analog Output

- Number of channels: 2 independent
- Type: 12-bit double-buffered (AD-7541)
- Linearity: ±1/2 bit
- Output range: 0~5V，0~10V，0~Ext Ref
- External reference: +10V or -10V max
- Output driving: ±5 mA
- Settling time: 0.6μs to 0.01% for full scale step

Digital I/O

- 16 TTL-level input
- Input low V_{IL} = 0.8 Vmax ; I_{IL} =-0.4 mA max
- Input high VIH = 2.0 Vmin ; I_{IH} = 20μA max
- 16 TTL-level output
- Output low V_{OL} = 0.5 Vmax; @I_{OL} = 8 mA max
- Output high V_{OH} = 2.7 Vmin; @I_{OH}= 0.4 mA max

Timer/Counter

- Number of channels: 1
- Resolution: 16-bit
- Compatibility: 5V/TTL
- Internal clock: 2MHz
- External clock: up to 10 MHz
- A/D pacer: cascaded 32-bit counter
- Programmable internal timer: 0.0047Hz~0.5MNz

General Specifications

- I/O connector: five 20-pin ribbon male
- Power requirements: +5V @ 500 mA typical
- Operating temperature: 0 ~ 60°C
- Operating humidity: 0 ~ 90% non-condensing
- Storage temperature: -20 ~ 70°C
- Dimensions: 163 mm x 124 mm

Ordering Information

Standard

A-812PG: 16-channel 12-bit 62.5 KS/s multi-function board

Optional

DB-8025: General screw terminal board
DB-8125: General screw terminal board
DB-16P: 16-channel isolated digital input board
DB-16R: 16-channel SPDT relay board
DN-20: DIN-rail mounting terminal board
ADP-20: 20-pin extender

A-8111

8-channel, 12-bit, 30KS/s Multi-Function board

Features

- 12-bit A/D converter
- 30 KS/s sampling rate
- 8 single-ended analog inputs
- A/D trigger modes: software trigger, pacer trigger
- A/D data transfer modes: polling, interrupt
- Software programmable gain: 1,2,4,8
- Bipolar analog input
- One 12-bit analog output
- 16 digital inputs & 16 digital outputs

Functional Description

The A-8111 is 12-bit multifunction analog and digital I/O board for the PC/AT compatible computer. The A-8111 provides 8-channel single-ended analog input, 1-channel analog output with 12-bit resolution, 16-channel digital input, 16-channel digital output. The sampling rate of A-8111 is 30K samples/s. It is completely compatible to PCL-711B and ACL-9111.

Applications

- Laboratory automation
- Sensor interface
- Production test

Specifications

Analog Input

- Number of channels: 8 single-ended
- Resolution: 12-bit
- Conversion rate: 30KS/s max
- Input impedance: 10MΩ II 6pF
- Over voltage protection: ±35V
- Accuracy: 0.01% of reading
- Linearity: ±1 bit
- On chip sample & hold
- Zero drift : ±25ppm/°C of FS max
- Input range:
  ±5V, ±2.5V, ±1.25V, ±0.625V, ±0.3125V

Analog Output

- Number of channels: 1 independent
- Type: 12 bit double buffered (AD-7948)
- Linearity: ±1/2 bit
- Output range: 0~5V，0~10V
- Output driving: ±5 mA
- Settling time: 0.6μs to 0.01% for full scale step

Digital I/O

- 16 TTL-level input
- Input low VIL = 0.8V max; IIL =-0.4 mA max
- Input high VIH = 2.0V min; IIH = 20μA max
- 16 TTL-level output
- Output low VOL = 0.5V max; @IOL = 8 mA max
- Output high VOH = 2.7V min; @IOH= 0.4 mA max

Timer/Counter

- A/D pacer: cascaded 32-bit counter
- Programmable internal timer: 0.0047Hz~0.5MNz
- Interrupt channel: 2,3,4,5,6,7 software selectable

General Specifications

- I/O connector: one of 37-pin D-Sub female
  two of 20-pin ribbon male
- Power requirements:

Device	+5V	+12V	-12V
A-8111	320 mA	60 mA	30 mA

- Operating temperature: 0 ~ 60°C
- Operating humidity: 0 ~ 90%, non-condensing
- Storage temperature: -20 ~ 70°C
- Dimensions: 157 mm x 106 mm

Ordering Information

Standard

A-8111: 8-channel 12-bit multi-function board

Optional

DB-8125: Screw terminal board
DN-37: DIN-rail mounting terminal board
DB-37: Directly connection terminal board
DB-16P: 16-channel isolated digital input board
DB-16R: 16-channel SPDT relay board
DN-20: DIN-rail mounting terminal board
ADP-20: 20-pin extender

A-626/A-628

6 & 8-channel 12-bit analog output board

A-626

A-628

Features

- 6 or 8 analog output channels
- 12-bit resolution
- 0~5V, 0~10V, ±5V, ±10V output ranges
- 4-20 mA current loop capability, sink to ground
- On-board reference -5V, -10V
- External reference ±10V (max.) AC or DC
- IRQ level from IRQ 3-IRQ 15
- 16-channel digital input and 16-channel digital output

Functional Description

The A-626 and A-628 are 12-bit analog output boards with 16-channel digital input and 16-channel digital output. The A-626 and A-628 boards support both current and voltage output. The output channels can be jumper-selectable for different voltage range ±10V, ±5V, 0~5V, 0~10V. It can also sink 4~20 mA current loop when connected to an external voltage source. On-board BB Ref- 01 chip is used for solving the thermo-drifting problem of the reference voltage. A-626 is much better than other products on the market for long period operation. On-board lattice FPGA increases the stability.

Applications

- Servo control
- Programmable voltage source
- Programmable current sink
- Product testing

Specifications

Analog Output

- Number of channels: 6 (A-626); 8(A-628)
- Resolution: 12-bit
- Type: AD 7541 or equivalent
- Differential linearity: ±1/2 LSB max over temperature
- Settling time: less than 65 μ s
- Temperature drift: 5ppm / °C max
- Relative accuracy: ± 1 LSB max
- Voltage output range: 0~5V, 0~10V, ±5V, ±10V
- Output driving capability: 5 mA max
- Current output range: 4~20 mA
- Current loop exciting voltage: 8V ~ 35V
- Reference voltage: Internal -5V or -10V
  External +10V or -10V max
- 16 TTL-level input
- Input low V_{IL} = 0.8 Vmax; I_{IL} =-0.4 mA max
- Input high V_{IH} = 2.0 Vmin; I_{IH} = 20 μ A max
- 16 TTL-level Output
- Output low V_{OL} = 0.5 Vmax; @I_{OL} = 8 mA max
- Output high V_{OH} = 2.7 Vmin; @I_{OH}= -400 μ A max

General Specifications

- I/O connector: one 37-pin D-Sub female
  two 20-pin ribbon male
- Power requirements:

Power	Typical A-626/A-628	Maximal A-626/A-628
+5V	450/500 mA	900/1100 mA
+12V	50/60 mA	110/130 mA
-12V	14/15 mA	90/105 mA

- Operating temperature: 0 ~ 60°C
- Operating humidity: 0 ~ 90% non-condensing
- Storage temperature: -20 ~ 70°C
- Dimensions:184 mm x 123 mm (A-626);
  198 mm x 123 mm (A-628)

Ordering Information

Standard

A-626: 6-channel 12-bit analog output board
A-626/S: A-626 with DN-37
A-628: 8-channel 12-bit analog output board
A-628/S: A-628 with DN-37

Optional

DN-37: DIN-rail mounting terminal board
DB-37: Directly connection terminal board
DB-16P: 16-channel isolated digital input board
DB-16R: 16-channel SPDT relay board
DN-20: DIN-rail mounting terminal board
ADP-20: 20-pin extender

Pin Assignment

A-812PG/A-8111/A-626/A-628

Pin Assignment

A-812PG

CN1

AI 0	1	2	A.GND	
AI 1	3	4	A.GND	
AI 2	5	6	A.GND	
AI 3	7	8	A.GND	
AI 4	9	10	A.GND	
AI 5	11	12	A.GND	
AI 6	13	14	A.GND	
AI 7	15	16	A.GND	
AI 8	17	18	A.GND	
AI 9	19	20	A.GND	

CN2

AI 10	1	2	A.GND
AI 11	3	4	A.GND
AI 12	5	6	A.GND
AI 13	7	8	A.GND
AI 14	9	10	A.GND
AI 15	11	12	A.GND
AO 0	13	14	A.GND
AO 1	15	16	A.GND
AO 0 EXT REF	17	18	A.GND
AO 1 EXT REF	19	20	A.GND

CN4

DI 0	1	2	DI 1
DI 2	3	4	DI 3
DI 4	5	6	DI 5
DI 6	7	8	DI 7
DI 8	9	10	DI 9
DI 10	11	12	DI 11
DI 12	13	14	DI 13
DI 14	15	16	DI 15
D.GND	17	18	D.GND
+5V	19	20	+12V

CN5

DO 0	1	2	DO 1
DO 2	3	4	DO 3
DO 4	5	6	DO 5
DO 6	7	8	DO 7
DO 8	9	10	DO 9
DO 10	11	12	DO 11
DO 12	13	14	DO 13
DO 14	15	16	DO 15
D.GND	17	18	D.GND
+5V	19	20	+12V

CN3

External Trigger	1	2	N.C.
DRDY	3	4	N.C.
Internal CLK 2MHz	5	6	Counter 1&2 Gate
N.C.	7	8	External CLK
N.C.	9	10	Counter 0 Out
N.C.	11	12	Counter 0 Gate
N.C.	13	14	Counter 1 Out
N.C.	15	16	N.C.
D.GND	17	18	Digital Ground
PC's+5V	19	20	N.C.

A-8111

CN1

		19	+5V OUT
N.C.	37	18	N.C.
N.C.	36	17	N.C.
N.C.	35	16	N.C.
N.C.	34	15	N.C.
N.C.	33	14	A.GND
N.C.	32	13	N.C.
N.C.	31	12	N.C.
D/A OUT	30	11	N.C.
A.GND	29	10	A.GND
A.GND	28	09	A.GND
A.GND	27	08	AI 7
A.GND	26	07	AI 6
A.GND	25	06	AI 5
A.GND	24	05	AI 4
A.GND	23	04	AI 3
A.GND	22	03	AI 2
A.GND	21	02	AI 1
A.GND	20	01	AI 0

CN2

DI 0	1	2	DI 1
DI 2	3	4	DI 3
DI 4	5	6	DI 5
DI 6	7	8	DI 7
DI 8	9	10	DI 9
DI 10	11	12	DI 11
DI 12	13	14	DI 13
DI 14	15	16	DI 15
D.GND	17	18	D.GND
+5V	19	20	+12V

CN3

DO 0	1	2	DO 1
DO 2	3	4	DO 3
DO 4	5	6	DO 5
DO 6	7	8	DO 7
DO 8	9	10	DO 9
DO 10	11	12	DO 11
DO 12	13	14	DO 13
DO 14	15	16	DO 15
D.GND	17	18	D.GND
+5V	19	20	+12V

A-626 6-channel analog output

		19	+5V OUT
A.GND	37	18	D.GND
A.GND	36	17	Ext trg
A.GND	35	16	A.GND
N.C.	34	15	CH3 I.OUT
N.C.	33	14	CH3 Ext ref
N.C.	32	13	CH3 V.OUT
A.GND	31	12	A.GND
N.C.	30	11	CH2 I.OUT
N.C.	29	10	CH2 Ext ref
N.C.	28	09	CH2 V.OUT
A.GND	27	08	A.GND
CH5 I.OUT	26	07	CH1 I.OUT
CH5 Ext ref	25	06	CH1 Ext ref
CH5 V.OUT	24	05	CH1 V.OUT
A.GND	23	04	A.GND
CH4 I.OUT	22	03	CH0 I.OUT
CH4 Ext ref	21	02	CH0 Ext ref
CH4 V.OUT	20	01	CH0 V.OUT

A-628 8-channel analog output

		19	+5V OUT
A.GND	37	18	D.GND
A.GND	36	17	Ext trg
A.GND	35	16	A.GND
CH7 I.OUT	34	15	CH3 I.OUT
CH7 Ext ref	33	14	CH3 Ext ref
CH7 V.OUT	32	13	CH3 V.OUT
A.GND	31	12	A.GND
CH6 I.OUT	30	11	CH2 I.OUT
CH6 Ext ref	29	10	CH2 Ext ref
CH6 V.OUT	28	09	CH2 V.OUT
A.GND	27	08	A.GND
CH5 I.OUT	26	07	CH1 I.OUT
CH5 Ext ref	25	06	CH1 Ext ref
CH5 V.OUT	24	05	CH1 V.OUT
A.GND	23	04	A.GND
CH4 I.OUT	22	03	CH0 I.OUT
CH4 Ext ref	21	02	CH0 Ext ref
CH4 V.OUT	20	01	CH0 V.OUT

A-626/A-628 DIO

DI 0	1	2	DI 1
DI 2	3	4	DI 3
DI 4	5	6	DI 5
DI 6	7	8	DI 7
DI 8	9	10	DI 9
DI 10	11	12	DI 11
DI 12	13	14	DI 13
DI 14	15	16	DI 15
D.GND	17	18	D.GND
+5V	19	20	+12V

DO 0	1	2	DO 1
DO 2	3	4	DO 3
DO 4	5	6	DO 5
DO 6	7	8	DO 7
DO 8	9	10	DO 9
DO 10	11	12	DO 11
DO 12	13	14	DO 13
DO 14	15	16	DO 15
D.GND	17	18	D.GND
+5V	19	20	+12V

DIO-144/96/48/24

144/96/48/24-bit OPTO-22 compatible DIO board

DIO-144

Features

- 144/96/48/24 digital TTL/DTL I/O channels
- All I/O lines are buffered on the board
- Emulate 6/4/2/1 industry standard 8255 PPI Mode 0
- Direct interface with OPTO-22 compatible I/O modules
- High output driving capability
- Programmable interrupt source
- On-board 8254 timer/counter chip (DIO-48)
- Interrupt source: timer, event, direct trigger (DIO-48)

Functional Description

The DIO-144/96/48/24 are high density parallel digital I/O Board with 144/96/48/24 bi-direction I/O channels. The header connectors are fully compatible with industry OPTO-22 standard. The DIO-144/96/48/24 emulate mode 0 of the industry standard 8255 programmable peripheral interface (PPI) chips. Each PPI offers three 8-bit ports, Port A, Port B and Port C. The Port C is divided into 2 nibble-wide (4-bit) ports. All groups are configured as inputs upon power-up or reset.

The DIO-48 has one 8254 Timer/Counter chip, one 16-bit counter accept event signal (P2C0) and it will generate trigger signal of interrupt. The other 32-bit counter is used to generate pacer time trigger of interrupt. The clock source is 32.768KHz, 2MHz, 4MHz or 8MHz.

Applications

- Test automation
- Digital I/O control
- Alarm monitoring
- Factory Automation
- Product Test

Specifications

Logic inputs and outputs

- Input logic high voltage: 2.0V min / 5.0V max
- Input logic low voltage: -0.5V min / 0.8V max
- Input load current: -0.45 mA min / +70 μ A
- Output sink current: +24 mA max
- Output source current: -15 mA
- All outputs and inputs are TTL compatible
- Programmable interrupt source:
  P2C0, P5C0, P8C0, P11C0, P14C0, P17C0 (DIO-144)
  P2C0, P5C0, P8C0, P11C0 (DIO-96)
  P2C3, P2C7, P5C3, P5C7 (DIO-48)
  P2C0 (DIO-24)

General Specifications

- I/O connector: six 50-pin ribbon male (DIO-144)
  four 50-pin ribbon male (DIO-96)
  two 50-pin ribbon male (DIO-48)
  one 50-pin ribbon male (DIO-24)
- Power requirements:

Device	DIO-144	DIO-96	DIO-48	DIO-24
+5V	2680 mA	1860 mA	880 mA	580 mA

- Operating temperature: 0 ~ 60°C
- Operating humidity: 0 ~ 90% non-condensing
- Storage temperature: -20 ~ 80°C
- Dimensions:
  182 mm x 110 mm (DIO-144, DIO-96, DIO-48)
  107 mm x 106 mm (DIO-24)

DIO-144/96/48/24

144/96/48/24-bit OPTO-22 compatible DIO board

DIO-96

DIO-48

DIO-24

Pin Assignment

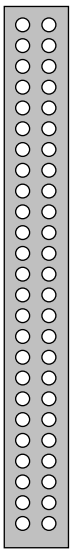

GND	50	49	Vcc
GND	48	47	PA_0
GND	46	45	PA_1
GND	44	43	PA_2
GND	42	41	PA_3
GND	40	39	PA_4
GND	38	37	PA_5
GND	36	35	PA_6
GND	34	33	PA_7
GND	32	31	PB_0
GND	30	29	PB_1
GND	28	27	PB_2
GND	26	25	PB_3
GND	24	23	PB_4
GND	22	21	PB_5
GND	20	19	PB_6
GND	18	17	PB_7
GND	16	15	PC_0
GND	14	13	PC_1
GND	12	11	PC_2
GND	10	9	PC_3
GND	8	7	PC_4
GND	6	5	PC_5
GND	4	3	PC_6
GND	2	1	PC_7

Ordering Information

Standard

DIO-24: 24-bit OPTO-22 DIO board
DIO-48: 48-bit OPTO-22 DIO board
DIO-96: 96-bit OPTO-22 DIO board
DIO-144: 144-bit OPTO-22 DIO board

Optional

DB-24P: 24-channel OPTO-isolated input terminal board
DB-24R: 24-channel relay terminal board
DB-24PR: 24-channel power relay terminal board
DB-24C: 24-channel open-collector output board
DB-24OD: 24-channel open-drain output board
DB-24POR: 24-channel PhotoMos relay board
DB-24SSR: 24-channel solid state relay board
DB-16P8R: 16-channel OPTO-isolated digital input & 8-channel relay output board
DN-50: DIN-rail mounting terminal board
ADP-37: 50-pin OPTO-22 ports to DB-37 adaptor
ADP-50: 50-pin extender

DIO-64

32 digital input & 32 digital output with timer/counter board

Features

- 32-channel digital input
- 32-channel digital output
- Buffered output for higher driving capability
- 3 independent programmable 16-bit down counters
- Four clock sources: 2M, 1M, 500K, 250KHz
- Three frequency divider:100,10,1
- One 16-bit counter, one 32-bit timer with a 4 MHz for interface function
- Interrupt source: timer, event, direct trigger
- Breadboard area for add-on circuit

Functional Description

The DIO-64 provides 32-channel digital input, 32-channel digital output and 6-channel counter/timer. The DIO-64 consists of two 16-bit input ports and two 16-bit output ports. The user can use the DB-16P to connect the input ports (CN2, CN4) for isolation purpose, or use DB-16R to interface to the output ports (CN1, CN3) for relay control. The first 8254 chip is used as general-purpose timer/ counter, such as frequency measurement, event counting and pulse generation. The second 8254 chip is used to generate interrupt trigger signal. The Counter 3 accept event signal and it will generate trigger signal for interrupt. The counter 4 and counter 5 are cascaded together. The clock source is 4MHz. It is used to generate pacer timer trigger for interrupt.

Applications

- Factory automation
- Product test
- Relay control

Pin Assignment

CN1/CN3

DO 0	1		2	DO 1
DO 2	3		4	DO 3
DO 4	5		6	DO 5
DO 6	7		8	DO 7
DO 8	9		10	DO 9
DO 10	11		12	DO 11
DO 12	13		14	DO 13
DO 14	15		16	DO 15
GND	17		18	GND
+5V	19		20	+12V

CN2/CN4

DI 0	1		2	DI 1
DI 2	3		4	DI 3
DI 4	5		6	DI 5
DI 6	7		8	DI 7
DI 8	9		10	DI 9
DI 10	11		12	DI 11
DI 12	13		14	DI 13
DI 14	15		16	DI 15
GND	17		18	GND
+5V	19		20	STROBE

CN5

CLK2	1		2	CLK1
OUT2	3		4	OUT1
GATE2	5		6	GATE1
CLK3	7		8	GLK0
OUT3	9		10	OUT0
GATE3	11		12	GATE0
GATE4	13		14	CLK4
X	15		16	OUT4
GND	17		18	GND
+5V	19		20	X

Specifications

Logic inputs and outputs

- All outputs and inputs are TTL Compatible
- Input logic high voltage: 2.0V min / 5.0V max
- Input logic low voltage: -0.5V min / 0.8V max
- Input load current: -0.45 mA min / +70 μ A
- Output sink current: +64 mA max
- Output source current: -15 mA

General Specifications

- I/O Connector: five 20-pin ribbon male
- Power requirements: +5V @ 500 mA typical
- Operating temperature: 0 ~ 60°C
- Operating humidity: 0 ~ 90% non-condensing
- Storage temperature: -20 ~ 80°C
- Dimensions: 93 mm x 135 mm

Ordering Information

Standard

DIO-64/3: 64 digital I/O with three timer/counter board
DIO-64/6: 64 digital I/O with six timer/counter board

Optional

DB-16P: 16-channel OPTO-isolated input board
DB-16R: 16-channel relay terminal board
DB-24PR: 24-channel power relay board
DB-24POR: 24-channel PhotoMos relay board
DB-24C: 24-channel open-collector output board
DB-24OD: 24-channel open-drain output board
DB-8025: General screw terminal board
DN-20: DIN-rail mounting terminal board
ADP-20: 20-pin extender

TMC-10

10-channel timer/counter board

Features

- On-board four 8254 timer/counter chips
- Eight independent 16-bit timer/counter
- Eight external clock inputs
- Eight external gate control signals
- Two cascaded 32-bit timer/counter
- 11 interrupt levels, jumper-selectable
- Programmable Interrupt sources: COUT6, COUT9, COUT12 or external
- Two internal clock sources: 8M/1.6M, 0.8M/80K
- 8-bit general purpose digital output

Functional Description

The TMC-10 is a general-purpose timer/counter and digital I/O board. It provides eight 16-bit timer/counter channels, two cascaded 32-bit timer/counter channels, 8-channel digital output, and two internal clock sources (8M/1.6M; 0.8M/80K) which are jumper-selectable. The external clock input pin and gate control pin may be used as general-purpose TTL-level DI. Four 8254 chips provide various powerful timer/counter function modes to match the industrial and laboratory applications.

Applications

- Event Counting
- Wave Generator
- Frequency Measurement
- Pulse Width Measurement
- Time-delay generation
- Watchdog Timer
- Industrial Automation

Specifications

Logic inputs and outputs

- Input logic high voltage: 2.0V min / 5.0V max
- Input logic low voltage: -0.5V min / 0.8V max
- Input load current: -0.45 mA min / +70 μ A
- Output sink current: +24 mA max
- Output source current: -15 mA
- All outputs and inputs are TTL Compatible

General Specifications

- I/O connector: one 37-pin D-Sub female
- Power requirements: +5V @ 500 mA typical
- Operating temperature: 0 ~ 60°C
- Operating humidity: 0 ~ 90% non-condensing
- Storage temperature: -20 ~ 80°C
- Dimensions: 121 mm x 106 mm

Pin Assignment

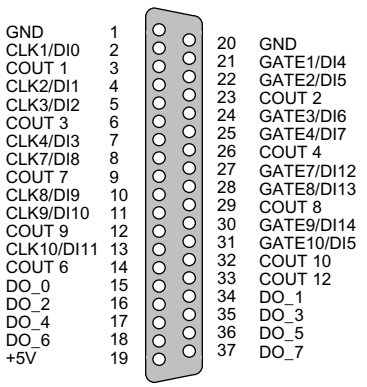

Ordering Information

Standard

TMC-10: 10-channel timer/counter board

Optional

DN-37: Two 37-pin connector DIN-rail mounting terminal board

DB-37: 37-pin D-sub directly connector terminal board