I-7000 Applied in the Control Equipment of Generator Excitation System

Yang Wei

Deyang Orient Electromechanical Company

The excitation control system is a very important component of the generator unit. Its performance directly determines the reliability of the generator operation. Typically distributed control system with multiple cabinets is used for excitation system of large and medium size generator units, therefore the change of status of switching relays in each cabinet will directly affect system operation. The traditional method for acquiring state changes of digital signals in each cabinet and transferring digital control signals is to connect switches and auxiliary contact points of relay to the outlet terminals of the cabinet. Then the state signals of each cabinet are delivered to the regulator cabinet through connecting lines among the cabinets.. Finally the regulator cabinet will send digital control signals to corresponding cabinet terminals. The shortcomings of this method include complex wiring among the cabinets, low reliability and the difficulty of service. I-7000 modules that communicate via RS-485 are capable of connecting 256 modules simultaneously, which makes the wiring and control very easy and reliable. Since 1998 our company has been using ICP industrial computers and 7000 series modules in our excitation products. The adjustment of electric field is implemented via industrial computer, the delivery of digital and control signals among the cabinets is performed via the RS485 communication bus of the 7000 series.

The principle of the control for the excitation system is shown in the following figure:

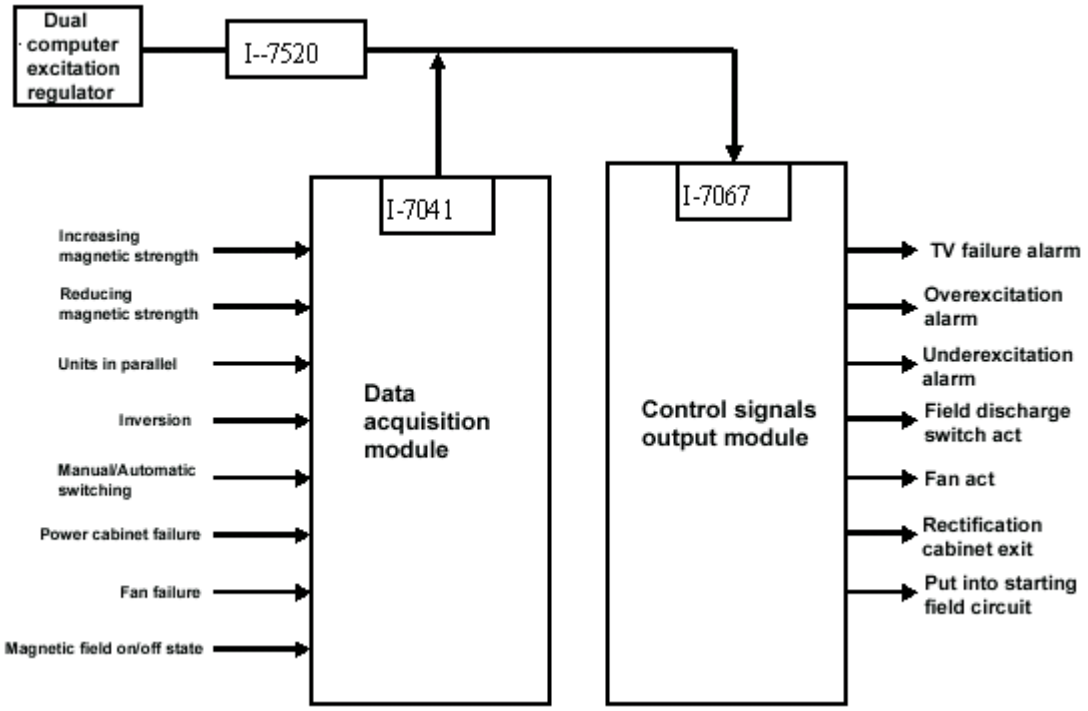

The computer regulator sends control signals to I-7067 modules in the same cabinet and other cabinets through I-7520 module. Each I-7067 module will drive related control units by performing received instructions. I-7041 module first collects all state signals of the system and then sends them back to I-7520 module via RS485 bus. The computer regulator reads state signals from I-7520 module and adjusts control output signals depending on the current state signals so as to reach the optimal system operating state.

Excitation system mainly includes a computer regulator cabinet, a field suppression equipment cabinet, a starting field and over-current and over-voltage protection cabinet and numbers of thyristor rectifier cabinet. I-7067 and I-7041 modules are mounted in each cabinet and I-7520 is mounted in regulator cabinet. Shielded twisted pair wiring is used for connecting the cabinets. The system hardware connection is shown in the following figure:

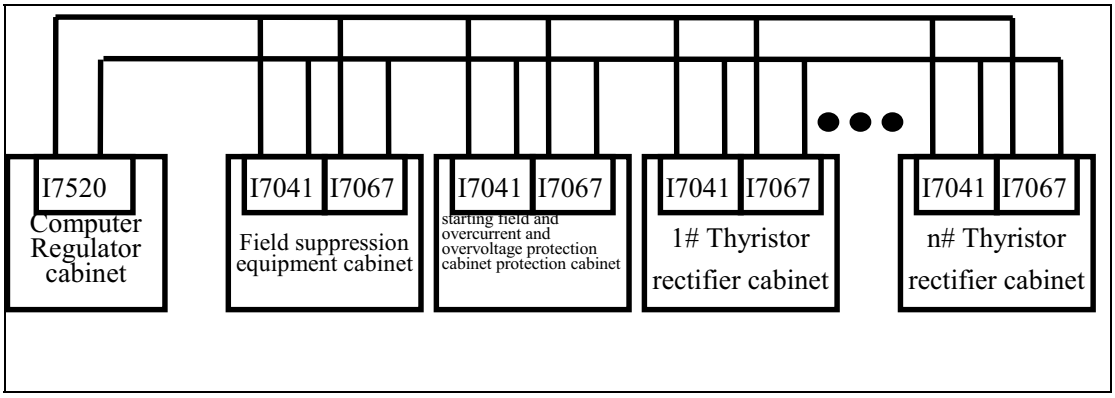

The software platform is developed using BC++ under DOS6.22. The signals of I-7041 module are acquired by polling method, and the control output is real-time output. As a relatively independent subprogram of system main regulator loop program, the operation program of all 7000 series modules doesn't impact the operating cycle of main program because it has to wait for some time for querying. Therefore we take advantage of the auto-direction control feature of serial port control chip on motherboard provided by ICP to resolve the problem. Sending control values and acquiring state values of regulator are transferred by TL16C550C, which makes it unnecessary for the program to keep waiting when the modules

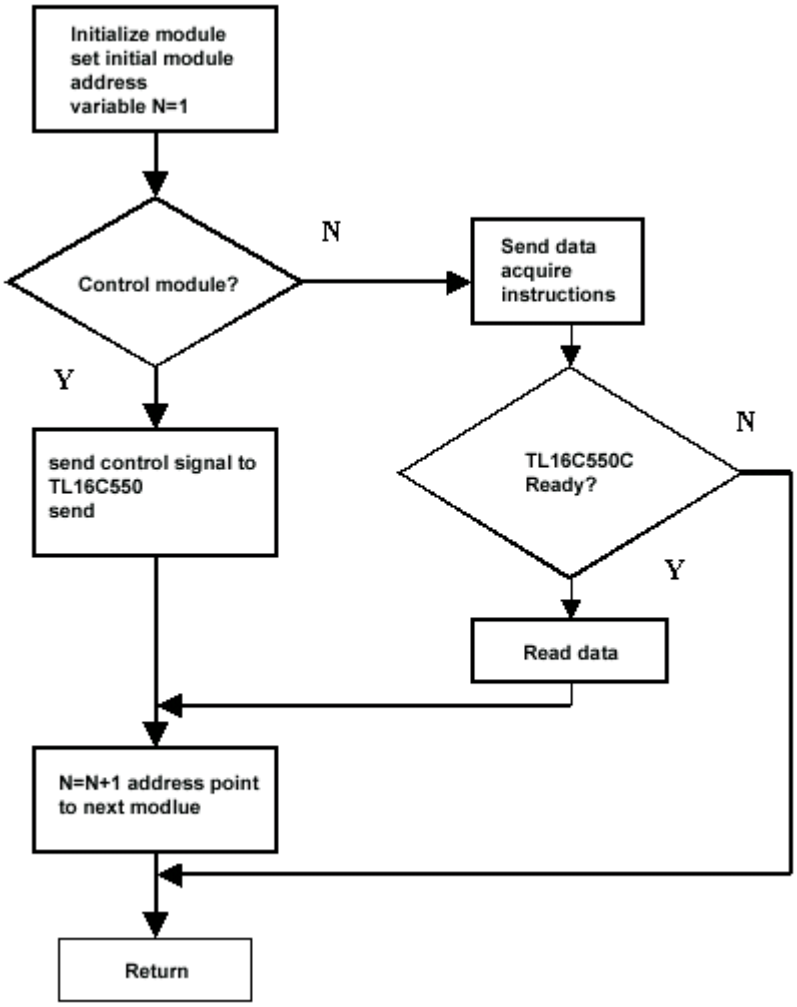

are in operating process. Module controlling subprogram software flow is shown in the figure.

Actual Performance:

The application of this module in the excitation equipment of the generator unit in Shanxi Shiquan and Sichuan Mahui has proved that it can completely replace the complex connection among cabinets, and greatly improve the system reliability and stability. The system performance has achieved the design objective. This design has been adopted as the standard in the manufacture of excitation equipment in our company.

Enclosed is the real image of the object: